REINFORCED CONCRETE NOTES CONT.:

30. WHERE CORROSION-RESISTANT REINFORCEMENT (CRR) IS SPECIFIED, USE MMFX2 REBAR ASTM A1035 GRADES 690 AND 830.
31. WELDING OF ELECTRICAL CONDUCTORS TO REINFORCING STEEL IS PROHIBITED WITHOUT THE APPROVAL OF THE ENGINEER OF RECORD.
32. PERFORMANCE OF SHOTCRETE SHALL BE PER ACI 506.2 SPECIFICATIONS.
33. ACI 318 TABLE 26.4.1.1.1(a) – SPECIFICATIONS FOR CEMENTITIOUS MATERIALS

CEMENTITIOUS MATERIALS	SPECIFICATION
PORTLAND CEMENT	ASTM C150
BLENDED HYDRAULIC CEMENTS	ASTM C595, EXCLUDING TYPE IS (≥70) AND TYPE IT (S≥70)
EXPANSIVE HYDRAULIC CEMENTS	ASTM C845
HYDRAULIC CEMENT	ASTM C1157
FLY ASH AND NATURAL POZZOLAN	ASTM C618
SLAG CEMENT	ASTM C989
SILICA FUME	ASTM C1240

34. AGGREGATES – COMPLIANCE REQUIREMENTS:
    - A. AGGREGATES SHALL CONFORM TO (1) OR (2):
        - 1. NORMALWEIGHT AGGREGATE: ASTM C33.
        - 2. LIGHTWEIGHT AGGREGATE: ASTM C330
    - B. AGGREGATES NOT CONFORMING TO ASTM C33 OR ASTM C330 ARE PERMITTED IF THEY HAVE BEEN SHOWN BY TEST OF ACTUAL SERVICE TO PRODUCE CONCRETE OF ADEQUATE STRENGTH AND DURABILITY AND ARE APPROVED BY THE BUILDING OFFICIAL.
    - C. MAXIMUM AGGREGATE SIZE:
        - 1. FOOTINGS........................1" MAX.
        - 2. SLAB ON GRADE, GRADE BEAMS........................$\frac{3}{4}$" MAX.
        - 3. ELEVATED STRUCT. SLABS, BEAMS, FRAMED COLUMNS.......$\frac{3}{8}$" MAX.
        - 4. REMAINDER........................$\frac{3}{4}$" MAX.
35. WATER – COMPLIANCE REQUIREMENTS:
    - A. MIXING WATER SHALL CONFORM TO ASTM C1602.
    - B. MIXING WATER, INCLUDING THAT PORTION OF MIXING WATER CONTRIBUTED IN THE FORM OF FREE MOISTURE ON AGGREGATES, SHALL NOT CONTAIN DELETERIOUS AMOUNTS OF CHLORIDE ION WHEN USED FOR PRESTRESSED CONCRETE, FOR CONCRETE THAT WILL CONTAIN ALUMINUM EMBEDMENTS, OR FOR CONCRETE CAST AGAINST STAY-IN-PLACE GALVANIZED STEEL FORMS.
36. ADMIXTURES – COMPLIANCE REQUIREMENTS:
    - A. ADMIXTURES SHALL CONFORM TO (1) THROUGH (4):
        - 1. WATER REDUCTION AND SETTING TIME MODIFICATION: ASTM C494.
        - 2. PRODUCING FLOWING CONCRETE: ASTM C1017.
        - 3. AIR ENTRAINMENT: ASTM C260.
        - 4. INHIBITING CHLORIDE-INDUCED CORROSION: ASTM C1582.
    - B. ADMIXTURES THAT DO NOT CONFORM TO THESE SPECIFICATIONS SHALL BE SUBJECT TO PRIOR REVIEW BY THE LICENSED DESIGN PROFESSIONAL.
    - C. CALCIUM CHLORIDE OR ADMIXTURES CONTAINING CHLORIDE FROM SOURCES OTHER THAN IMPURITIES IN ADMIXTURE INGREDIENTS SHALL NOT BE USED IN PRESTRESSED CONCRETE, IN CONCRETE CONTAINING EMBEDDED ALUMINUM, OR IN CONCRETE CAST AGAINST STAY-IN-PLACE GALVANIZED STEEL FORMS.
    - D. ADMIXTURES USED IN CONCRETE CONTAINING EXPANSIVE CEMENTS CONFORMING TO ASTM C845 SHALL BE COMPATIBLE WITH THE CEMENT AND PRODUCE NO DELETERIOUS EFFECTS.
37. STEEL FIBER REINFORCEMENT – COMPLIANCE REQUIREMENTS:
    - A. STEEL FIBER REINFORCEMENT USED FOR SHEAR RESISTANCE SHALL SATISFY (1) AND (2):
        - 1. BE DEFORMED AND CONFORM TO ASTM A820.
        - 2. HAVE A LENGTH-TO-DIAMETER RATIO OF AT LEAST 50 AND NOT EXCEEDING 100.

STRUCTURAL OBSERVATION

1

STRUCTURAL OBSERVATION SHALL BE PROVIDED IN ACCORDANCE WITH SECTION 1709 OF THE CALIFORNIA BUILDING CODE AND SIMI VALLEY ORDINANCE #1262 FOR THIS PROJECT. STRUCTURAL OBSERVATION MEANS THE VISUAL OBSERVATION OF THE STRUCTURAL SYSTEM FOR GENERAL CONFORMANCE TO THE APPROVED PLANS AND SPECIFICATIONS AT SIGNIFICANT CONSTRUCTION STAGES AT COMPLETION OF THE STRUCTURAL SYSTEM.

NAME OF PERSON RESPONSIBLE TO PERFORM THE REQUIRED STRUCTURAL OBSERVATION:

NAME: RAMON GARCIA
TITLE: STRUCTURAL ENGINEER
LICENSE OR REGISTRATION NO: 4595
ADDRESS: 2720 COCHRAN STREET, SUITE 8B
SIMI VALLEY, CA 93065
PHONE NO: 805 522-3379

STRUCTURAL OBSERVATION REQUIREMENTS:

1. PRE-CONSTRUCTION MEETING-PRIOR TO CONSTRUCTION COMMENCEMENT, THE STRUCTURAL OBSERVER, AS OWNER'S REPRESENTATIVE, SHALL ATTEND THE SITE PRE-CONSTRUCTION MEETING. A PORTION OF THE MEETING WILL BE DEDICATED FOR THE STRUCTURAL OBSERVER TO IDENTIFY THE MAJOR STRUCTURAL ELEMENTS AND CONNECTIONS THAT AFFECT THE VERTICAL AND LATERAL LOADS SYSTEMS OF THE STRUCTURE, AND TO OUTLINE THE SCHEDULE FOR STRUCTURAL OBSERVATION.

THOSE REQUIRED TO ATTEND THE PRE-CONSTRUCTION MEETING INCLUDE;
- A. OWNER OR OWNER'S REPRESENTATIVE;
- B. ENGINEER OR ARCHITECT RESPONSIBLE FOR THE STRUCTURAL DESIGN;
- C. STRUCTURAL OBSERVER;
- D. GENERAL CONTRACTOR;
- E. AFFECTED SUBCONTRACTOR(S);
- F. SPECIAL INSPECTOR(S); AND
- G. BUILDING INSPECTOR(S).

2. STRUCTURAL ELEMENTS REQUIRED OBSERVATION – THE FOLLOWING STRUCTURAL ELEMENTS WILL REQUIRE STRUCTURAL OBSERVATION: (ENGINEER OR ARCHITECT RESPONSIBLE FOR THE STRUCTURAL DESIGN SHALL CHECK THE APPLICABLE BOXES)

	ELEMENT	ITEMS TO BE OBSERVED
✓	FOUNDATIONS:	SIZE, GRADE & PLACEMENT OF REINFORCEMENT, ANCHOR BOLT SIZE & SPACING AND HOLD-DOWN ANCHOR SIZE & LOCATION.
	GRADE BEAMS:	SIZE, GRADE & PLACEMENT OF REINFORCEMENT AND STRENGTH OF CONCRETE MIX.
✓	SHEARWALLS (WOOD):	PANEL THICKNESS & LENGTH, NAIL SIZE & SPACING, ANCHOR BOLT WASHERS, HOLD-DOWN ANCHORS AND SHEAR TRANSFER ELEMENTS.
	SHEARWALLS (CONCRETE/MASONRY):	SIZE, GRADE & PLACEMENT OF REINFORCEMENT, STRENGTH OF CONCRETE MIX OR BLOCK/MORTER AND CONNECTION HARDWARE.
✓	STRUCTURAL STEEL:	CANTILEVERED COLUMNS, MOMENT FRAMES AND CONNECTIONS.
	DIAPHRAGMS AND DRAG TIES:	PANEL THICKNESS, NAILS SIZE & SPACING AND STRAP TYPE, LEIGTH & NAILING.
	SHEAR TRANSFER CONNECTIONS:	NAIL SIZE & SPACING, BLOCKING ARRANGEMENT AND MANUFACTURED HARDWARE TYPE & SPACING.
✓	VERTICAL LOAD SUPPORTING ELEMENTS:	BEAMS, CONNECTIONS, HARDWARE AND COLUMNS.
	OTHER (CLEARLY IDENTIFY):	______________________ ______________________

3. WRITTEN VERIFICATION OF STRUCTURAL OBSERVATION – THE STRUCTURAL OBSERVER SHALL PREPARE A REPORT FOR EACH STAGE OF CONSTRUCTION OBSERVED. OBSERVED DEFICIENCIES SHALL BE CLEARLY NOTED ON THE REPORT AND ALL REMEDIAL ACTION REQUIRED TO CORRECT THE CONDITION SHALL BE ATTACHED THERETO. REMEDIAL WORK MAY REQUIRE REVIEW AND APPROVAL BY THE BUILDING DEPARTMENT. AFTER THE REMEDIAL WORK IS COMPLETE, THE STRUCTURAL OBSERVER SHALL INDICATE THAT THE WORK WAS COMPLETED TO THE SATISFACTION OF THE STRUCTURAL OBSERVER.

COPIES OF ALL STRUCTURAL OBSERVATION FORMS SHALL BE SUBMITTED TO THE FOLLOWING:
- A. CITY BUILDING OFFICIAL (ORIGINAL WITH WET SIGNATURE);
- B. OWNER OR OWNER'S REPRESENTATIVE;
- C. ENGINEER OR ARCHITECT RESPONSIBLE FOR THE STRUCTURAL DESIGN;
- D. GENERAL CONTRACTOR; AND
- E. SPECIAL INSPECTOR(S).

NO BUILDING & SAFETY DIVISION INSPECTIONS WILL BE PERFORMED PRIOR TO SUBMITTAL OF THE STRUCTURAL OBSERVATION REPORT FOR THAT STAGE OF CONSTRUCTION.

STRUCTURAL OBSERVATION DOES NOT WAIVE THE REQUIREMENT FOR SPECIAL INSPECTIONS OR BUILDING & SAFETY DIVISION INSPECTIONS AS REQUIRED IN THE BUILDING CODE.

REINFORCED CONCRETE NOTES:

1. CONCRETE MIXES SHALL BE DESIGNED BY A RECOGNIZED TESTING LABORATORY AND COPIES OF THE DESIGN SHALL BE SENT TO THE ARCHITECT AND THE ENGINEER. COMPRESSIVE STRENGTH TEST REPORTS SHALL BE SUBMITTED TO THE BUILDING DEPARTMENT AND THE ARCHITECT. ALL CONCRETE EXCEPT FOUNDATION CONCRETE SHALL CONTAIN POLYMER BASED WATER REDUCING ADMIXTURE.
2. ALL REINFORCING BARS, ANCHOR BOLTS, PRE STRESSING TENDONS, AND ALL OTHER CONCRETE INSERTS SHALL BE WELL SECURED IN POSITION PRIOR TO PLACING CONCRETE.
3. THE MAXIMUM SLUMP SHALL NOT EXCEED 4" +/- 1" FOR FOOTINGS, SLABS ON EARTH, AND MASS CONCRETE, AND 5" +/- 1" FOR OTHER CONCRETE. SLUMP MAY BE INCREASED WHEN CHEMICAL ADMIXTURES ARE USED, PROVIDED THAT ADMIXTURE-TREATED CONCRETE HAS THE SAME OR LOWER WATER: CEMENT OR WATER: CEMENTITIOUS MATERIAL RATIO. (ACI 211 TABLE 6.3.1)
4. MINIMUM COMPRESSIVE STRENGTH:
   PROVIDE CONCRETE WITH THE FOLLOWING MINIMUM COMPRESSIVE STRENGTH (f'c) AT 28 DAYS UNLESS NOTED OTHERWISE (MINIMUM 5 SACKS OF CEMENT PER CUBIC YARD) (MAXIMUM WATER/CEMENT RATIO BY WEIGHT SHALL BE .65):
   A. SLABS ON GRADE........................ 3000 P.S.I.*(HARDROCK)
   B. SPREAD FOOTING........................ 3000 P.S.I. (HARDROCK)
   C. CONTINUOUS FOOTINGS........................ 3000 P.S.I. (HARDROCK)
   * 2500 PSI STRENGTH USED FOR DESIGN, SPECIAL INSPECTION NOT REQUIRED.
6. THE COMPRESSIVE STRENGTH OF EXTERIOR SLABS AND FLAT WORK SHALL BE INCREASED FOR MODERATE AND SEVERE WEATHERING EXPOSURE PER TABLE 1904.2.2 OF THE CBC.
7. ALL STRUCTURAL CONCRETE IS TO BE REINFORCED.
8. CONTRACTOR SHALL SUBMIT SLAB CONSTRUCTION JOINT LAYOUT DRAWINGS TO THE ARCHITECT AND ENGINEER FOR REVIEW. THE MAXIMUM SPACING OF CONTROL JOINTS IN SLAB ON GRADE EACH WAY SHALL BE 30X THE SLAB THICKNESS BEFORE 7 DAYS OF CURING. SLABS REQUIRE AT LEAST 7 DAYS CURING (14 DAYS WHERE FLY ASH OR POZOLAN IS USED), AND THE ENVIRONMENT (HUMIDITY AND TEMPERATURE) OF ROOM SHALL BE ACCLIMATED TO LONG TERM CLIMATE CONDITIONS PRIOR TO INSTALLATION OF FLOORING. THE SLAB TEMPERATURE SHALL BE WITHIN 5 DEGREES OF DEW POINT DURING CURING. NO CURING COMPOUND SHALL BE USED, ONLY WET CURED. MOISTURE AND HUMIDITY TESTING SHALL BE PERFORMED BY AN INDEPENDENT TESTING LABORATORY HIRED BY THE OWNER, AND TESTS RESULTS SHALL BE SUBMITTED TO THE ARCHITECT FOR APPROVAL PRIOR TO INSTALLATION OF FLOORING.
9. PROJECTING CORNERS OF BEAMS, COLUMNS, WALLS, ETC.. SHALL BE FORMED WITH A 3/4" CHAMFER UNLESS DETAILED OTHERWISE.
10. IF EXPOSURE TO SULFATES, OR SPECIAL EXPOSURE CONDITIONS OCCUR, THE CONCRETE STRENGTH, WATER CEMENT RATIOS, AND OTHER PROPERTIES OF THE CONCRETE MIX SHALL BE IN ACCORDANCE WITH ACI 318 SECTION 4.3. VERIFY WITH SOILS REPORT FOR CORROSIVE CHEMICALS IN THE SOILS.
11. DO NOT POUR CONCRETE WHEN THE TEMPERATURE EXCEEDS 90°F OR 80°F WHEN THE WIND EXCEEDS 12MPH. START CURING AS SOON AS HARD TRAWLING IS DONE. ALL CURING SHALL BE WET CURING BY USING BURLAP FOR A MINIMUM OF 7 DAYS. BURLAP MUST BE PLACED WITHIN 2 HOURS OF POURING (NO SPRAY CURING). WHEN WIND, TEMPERATURE AND HUMIDITY CONDITIONS CAUSE EARLY DISAPPEARANCE OF BLEED WATER, STEPS SHALL BE TAKEN TO USE A FOG SPRAY. CURING SHALL COMMENCE IMMEDIATELY AFTER FINISHING TRAWLING.
12. WHERE AIR ENTRAINED CONCRETE IS SPECIFIED, THE VOLUME OF AIR IN THE MORTAR FRACTION OF CONCRETE MIX DESIGN SHALL BE 9% ±1%.
13. ALL REINFORCING BAR BENDS SHALL BE MADE COLD.
14. REINFORCING STEEL SHALL BE SPLICED WITH CLASS B SPLICES UNLESS NOTED OTHERWISE ON THE DRAWINGS.
15. LOW HYDROGEN ELECTRODES SHALL BE USED WHEREVER REINFORCING STEEL IS WELDED. BARS SHALL BE A706 GRD. 60 MIN. FOR WELD ABILITY.
16. AT THE TIME CONCRETE IS PLACED, REINFORCEMENT SHALL BE FREE FROM MUD, OIL, OR OTHER NONMETALLIC COATINGS THAT DECREASE BOND. WHERE SPECIFIED IN THE DETAILS, EPOXY-COATING OF STEEL REINFORCEMENT IN ACCORDANCE WITH ACI STANDARDS. EXCEPT FOR PRESTRESSING STEEL, STEEL REINFORCEMENT WITH RUST, MILL SCALE, OR A COMBINATION OF BOTH SHALL BE CONSIDERED SATISFACTORY, PROVIDED THE MINIMUM DIMENSIONS (INCLUDING HEIGHT OF DEFORMATIONS) AND WEIGHT OF A HAND-WIRE-BRUSHED TEST SPECIMEN COMPLY WITH APPLICABLE ASTM SPECIFICATIONS.
17. THE MINIMUM CLEAR SPACING BETWEEN PARALLEL BARS IN A LAYER SHALL BE d_b BUT NOT LESS THAN 1 IN. WHERE PARALLEL REINFORCEMENT IS PLACED IN TWO OR MORE LAYERS, BARS IN THE UPPER LAYERS SHALL BE PLACED DIRECTLY ABOVE BARS IN THE BOTTOM LAYER WITH CLEAR DISTANCE BETWEEN LAYERS NOT LESS THAN 1 IN. 21. CLEAR DISTANCE LIMITATION BETWEEN BARS SHALL APPLY ALSO TO THE CLEAR DISTANCE BETWEEN A CONTACT LAP SPLICE AND ADJACENT SPLICES OR BARS.
18. IN SPIRALLY REINFORCED OR TIED REINFORCED COMPRESSION MEMBERS, CLEAR DISTANCE BETWEEN LONGITUDINAL BARS SHALL BE NOT LESS THAN $1.5d_b$ NOR LESS THAN $1\frac{1}{2}$ IN.
19. IN WALLS AND SLABS OTHER THAN CONCRETE JOIST CONSTRUCTION, PRIMARY FLEXURAL REINFORCEMENT SHALL NOT BE SPACED FARTHER APART THAN THREE TIMES THE WALL OR SLAB THICKNESS, NOR FARTHER APART THAN 18 IN.
20. WHERE CONCRETE MUST BE INSTALLED AND CURED IN COLD WEATHER, THE GENERAL REQUIREMENTS AND SPECIFICATIONS OF ASTM STD C-31 SHALL BE IMPLEMENTED.
21. CAST-IN-PLACE CONCRETE (NON-PRESTRESSED)
    THE FOLLOWING MINIMUM CONCRETE COVER SHALL BE PROVIDED FOR REINFORCEMENT:
    A. CONCRETE CAST AGAINST AND PERMANENTLY EXPOSED TO EARTH........................3" MIN.
    B. CONCRETE EXPOSED TO EARTH OR WEATHER:
    - NO.6 THROUGH NO.18 BARS........................2" MIN.
    - NO.5 BAR, W31 OR D31 WIRE, AND SMALLER........................$1\frac{1}{2}$" MIN.

    C. CONCRETE NOT EXPOSED TO WEATHER OR IN CONTACT WITH GROUND:
    SLABS, WALLS, JOISTS:
    - NO.14 AND NO.18 BARS........................$1\frac{1}{2}$" MIN.
    - NO.11 BAR AND SMALLER........................$\frac{3}{4}$" MIN.

    BEAMS, COLUMNS:
    - PRIMARY REINFORCEMENT, TIES, STIRRUPS, SPIRALS........................$1\frac{1}{2}$" MIN.

    SHELLS, FOLDED PLATE MEMBERS:
    - NO.6 BAR AND LARGER........................$\frac{3}{4}$" MIN.
    - NO.5 BAR, W31 OR D31 WIRE, AND SMALLER........................$\frac{1}{2}$" MIN.
22. BUNDLED BARS:
    FOR BUNDLED BARS, MINIMUM CONCRETE COVER SHALL BE EQUAL TO THE EQUIVALENT DIAMETER OF THE BUNDLE, BUT NEED NOT TO BE GREATER THAN 2 IN.; EXCEPT FOR CONCRETE CAST AGAINST AND PERMANENTLY EXPOSED TO EARTH, WHERE MINIMUM COVER SHALL BE 3 IN. GROUPS OF PARALLEL REINFORCING BARS BUNDLED IN CONTACT TO ACT AS A UNIT SHALL BE LIMITED TO FOUR IN ANY ONE BUNDLE. BUNDLED BARS SHALL BE ENCLOSED WITHIN STIRRUPS OR TIES. BARS LARGER THAN NO. 11 SHALL NOT BE BUNDLED IN BEAMS. INDIVIDUAL BARS WITHIN A BUNDLE TERMINATED WITHIN THE SPAN OF FLEXURAL MEMBERS SHALL TERMINATE AT DIFFERENT POINTS WITH AT LEAST $40d_b$ STAGGER.
23. CORROSIVE ENVIRONMENTS:
    IN CORROSIVE ENVIRONMENTS OR OTHER SEVERE EXPOSURE CONDITIONS, AMOUNT OF CONCRETE PROTECTION SHALL BE SUITABLY INCREASED, AND DENSENESS AND NONPOROSITY OF PROTECTING CONCRETE SHALL BE CONSIDERED, OR OTHER PROTECTION SHALL BE PROVIDED. "COVER" WHERE NOTED ON PLANS AND DETAILS IS NOT A MINIMUM, UNLESS NOTED AS "MIN." THE COVER SHALL BE AS NOTED WITH TOLERANCE.
24. MINIMUM DIAMETER OF BEND:

MINIMUM DIAMETERS OF BEND	
BAR SIZE	MINIMUM DIAMETER
NO.3 THROUGH NO.8	$6d_b$
NO.9, NO.10, AND NO.11	$8d_b$
NO.14 AND NO.18	$10d_b$

25. TOLERANCE FOR d AND MINIMUM CONCRETE COVER IN FLEXURAL MEMBERS, WALLS, AND COMPRESSION MEMBERS SHALL BE AS FOLLOWS:

	TOLERANCE ON d	TOLERANCE ON MINIMUM CONCRETE COVER
$d \le 8$ IN.	$\pm\frac{3}{8}$ IN.	$-\frac{3}{8}$ IN.
$d > 8$ IN.	$\pm\frac{1}{2}$ IN.	$-\frac{1}{2}$ IN.

    EXCEPT THAT TOLERANCE FOR THE CLEAR DISTANCE TO FORMED SOFFITS SHALL BE MINUS $\frac{1}{4}$ IN. AND TOLERANCE FOR COVER SHALL NOT EXCEED MINUS $\frac{1}{3}$ THE MINIMUM CONCRETE COVER REQUIRED IN THE DESIGN DRAWINGS AND SPECIFICATIONS.

26. MAXIMUM CHLORIDE ION CONTENT FOR CORROSION PROTECTION OF REINFORCEMENT:

TYPE OF MEMBER	MAXIMUM WATER SOLUBLE CHLORIDE ION (Cl^-) IN CONCRETE, PERCENT BY WEIGHT OF CEMENT
PRESTRESSED CONCRETE	0.06
REINFORCED CONCRETE EXPOSED TO CHLORIDE IN SERVICE	0.15
REINFORCED CONCRETE THAT WILL BE DRY OR PROTECTED FROM MOISTURE IN SERVICE	1.00
OTHER REINFORCED CONCRETE CONSTRUCTION	0.30

27. TOLERANCE FOR LONGITUDINAL LOCATION OF BEND AND ENDS OF REINFORCEMENT SHALL BE ± 2 IN., EXCEPT THE TOLERANCE SHALL BE $\pm\frac{1}{2}$ IN. AT THE DISCONTINUOUS ENDS OF BRACKETS AND CORBELS, AND ± 1 IN. AT THE DISCONTINUOUS ENDS OF OTHER MEMBERS.
28. REINFORCEMENT RESISTING EARTHQUAKE-INDUCED FLEXURAL AND AXIAL FORCES IN FRAME MEMBERS AND IN STRUCTURAL WALL BOUNDARY ELEMENTS SHALL COMPLY WITH ASTM A 706. ASTM A 615 GRADES 40 AND 60 REINFORCEMENT SHALL BE PERMITTED IN THESE MEMBERS IF:
    A. THE ACTUAL YIELD STRENGTH BASED ON MILL TESTS DOES NOT EXCEED f_y BY MORE THAN 18,000 PSI (RETESTS SHALL NOT EXCEED THIS VALUE BY MORE THAN AN ADDITIONAL 3000 PSI): AND
    B. THE RATION OF THE ACTUAL TENSILE STRENGTH TO THE ACTUAL YIELD STRENGTH IS NOT LESS THAN 1.25.THE VALUE OF f_{yt} FOR TRANSVERSE REINFORCEMENT INCLUDING SPIRAL REINFORCEMENT SHALL NOT EXCEED 60,000 PSI.
29. CONCRETE FLOOR FLATNESS SHALL BE A MINIMUM OF $\frac{1}{4}$" : 10 FT. TYP. U.N.O.

DESIGN/BUILD AND DEFERRED APPROVAL ITEMS AND REQUIREMENTS:

1. THE ABBREVIATION "GC" WHERE SHOWN ON THE DRAWINGS INDICATES GENERAL CONTRACTOR, OR IN THE CASE WHERE THE PROJECT DOES NOT HAVE A GENERAL CONTRACTOR, THE CONTRACTOR RESPONSIBLE FOR THE DESIGN/BUILD OR DEFERRED SUBMITTAL ITEM.
2. THE CONTRACTOR SHALL CONTACT THE BUILDING DEPARTMENT TO DETERMINE WHICH DESIGN/BUILD ITEMS ARE REQUIRE A PERMIT THROUGH THE DEFERRED APPROVAL PROCESS.
3. FOR THOSE ITEMS REQUIRING DEFERRED APPROVAL, THE CONTRACTOR SHALL BE RESPONSIBLE FOR OBTAINING PERMITS. THE CONTRACTOR SHALL PREPARE ALL REQUIRED DOCUMENTS: CALCULATIONS, SHOP DRAWINGS, MATERIAL SPECIFICATIONS AND DATA SHEETS, ALL OF WHICH SHALL BE STAMPED AND SIGNED BY A PROFESSIONAL ENGINEER LICENSED IN THE PROJECT STATE. IN THE EVENT THAT THE CONTRACTOR IS UNABLE TO OBTAIN OUTSIDE STRUCTURAL ENGINEERING SERVICES, NCE CAN BE CONTRACTED TO PERFORM SUCH SERVICES AT AN ADDITIONAL FEE. PRIOR TO THE CONTRACTOR'S SUBMITTAL TO THE BUILDING DEPARTMENT, ALL DOCUMENTS SHALL BE SUBMITTED TO THE STRUCTURAL ENGINEER FOR REVIEW. THIS REVIEW IS LIMITED TO VERIFICATION THAT THE DESIGN COMPLIES WITH THE PROJECT DESIGN LOADING CRITERIA, THAT THE PRIMARY STRUCTURAL SYSTEM IS CAPABLE OF SUPPORTING THE IMPOSED LOADS AT CONNECTION POINTS, AND FOR COORDINATION AS REQUIRED. THE PREPARER OF THE DOCUMENTS IS SOLELY RESPONSIBLE FOR THEIR DESIGN. THE STRUCTURAL ENGINEER IS NOT RESPONSIBLE FOR VERIFICATION OF CODE COMPLIANCE. THE CONTRACTOR SHALL SUBMIT DOCUMENTS TO THE BUILDING DEPARTMENT AND RESOLVE ALL PLAN CHECK CORRECTIONS TO OBTAIN A PERMIT. FABRICATION AND INSTALLATION OF DESIGN/BUILD AND DEFERRED APPROVAL ITEMS SHALL NOT PROCEED UNTIL THE DESIGN TEAM HAS REVIEWED THE DOCUMENTS AND THE CONTRACTOR HAS OBTAINED A PERMIT FOR THE ITEMS REQUIRING DEFERRED APPROVAL.
4. THE CONTRACTOR SHALL COORDINATE WITH OTHER TRADES, THE ARCHITECT, AND OTHER CONSULTANTS. DESIGN SHALL INCLUDE THE DESIGN OF THE ELEMENT AND ITS CONNECTION TO THE STRUCTURE. THE STRUCTURAL ENGINEER HAS NOT DESIGNED THE FOLLOWING ITEMS:
    - A. CURTAIN WALL, WINDOW WALL, LOUVER, AND GLAZING SYSTEMS.
    - B. FIRE SPRINKLER SUPPORT.
    - C. ELEVATOR GUARDRAILS, SUPPORT BRACKETS, MACHINE BEAMS, AND HOIST BEAMS.
    - D. ANCHORAGE OF EQUIPMENT AND COMPONENTS FOR MECHANICAL, ELECTRICAL, PLUMBING, ETC.
    - E. TRUSSES, AND COMMERCIAL JOISTS
    - F. EXTERIOR MOUNTED AWNINGS AND EYEBROWS.
    - G. ANY STRUCTURE THAT IS NOT SHOWN ON THE STRUCTURAL DRAWINGS BUT IS REQUIRED BY OTHER DISCIPLINES, SUCH AS ARCHITECTURAL, MECHANICAL, ELECTRICAL, PLUMBING, LANDSCAPE, ETC.
5. ALL PIPES, DUCTS, AND CONDUIT SHALL BE BRACED TO RESIST THE FORCES PRESCRIBED IN ASCE 7 SECTION 13.6 WITH DETAILS IN ACCORDANCE WITH THE SMACNA SEISMIC RESTRAINT MANUAL, GUIDELINES FOR MECHANICAL SYSTEMS.

DESIGN CRITERIA:

(CBC 2016) BUILDING CODE

1. FLOOR LIVE LOADS=40 PSF [1603.1.1 CBC]
   FLOOR DEAD LOADS=15 PSF
2. ROOF LIVE LOAD=20 PSF [1603.1.2 CBC]
   FLAT ROOF TOTAL DEAD LOAD=17 PSF
   SLOPED ROOF TOTAL DEAD LOAD=33 PSF
3. [1603.1.4 CBC] WIND DESIGN DATA:
   NOMINAL WIND SPEED (3-SEC GUST)=85 MPH
   ULTIMATE WIND SPEED (3-SEC GUST)=110 MPH
   1
   WIND RISK CATEGORY=III
   WIND EXPOSURE(S)=C
4. [1603.1.5 CBC] EARTHQUAKE DESIGN DATA:
   SEISMIC IMPORTANCE FACTOR I=1.25
   SEISMIC RISK CATEGORY=E
   MAPPED SPECTRAL RESPONSE ACCELERATIONS, S_s=2.092g & S_1=0.79g
   SITE CLASS=D
   SPECTRAL RESPONSE COEFFICIENTS, S_{DS}=1.395g
   SEISMIC DESIGN CATEGORY=E
   BASIC SEISMIC-FORCE RESISTING SYSTEM(S)= LIGHT-FRAMED WALL SHEATHED WITH WOOD STRUCTURAL PANELS RATED FOR SHEAR RESISTANCE OR STEEL SHEETS
   DESIGN BASE SHEAR V=0.268W
   SEISMIC RESPONSE COEFFICIENT(S), C_s=0.268
   RESPONSE MODIFICATIONS FACTOR(S), R=6.5
   ANALYSIS PROCEDURE USED: EQUIVALENT LATERAL FORCE PROCEDURE
   REDUNDANCY FACTOR, ρ=1.3

FOUNDATION NOTES:

1. FOUNDATION DESIGN IS BASED ON THE SOIL INVESTIGATION REPORT BY:
   GORIAN & ASSOCIATES, INC. – 3595 OLD CONEJO ROAD, THOUSAND OAKS, CA 91320
   P.805.375.9262 F.805.375.9263
   DATE: MAY 2, 2017
   WORK ORDER: 2702-0-0-106
2. DESIGN SOIL BEARING PRESSURE IS 2000PSF @ 24" MIN. BELOW LOWEST ADJACENT GRADE.
3. PRIOR TO THE CONTRACTOR REQUESTING A BUILDING DEPT. FOUNDATION INSPECTION, THE SOILS ENGINEER SHALL ADVISE THE BUILDING OFFICIAL, IN WRITING, THAT:
   A. THE BUILDING PAD WAS PREPARED ACCORDING TO THE SOILS REPORT.
   B. THE FOUNDATION EXCAVATIONS COMPLY WITH THE INTENT OF THE SOILS REPORT.
   C. THE UTILITY TRENCHES HAVE BEEN PROPERLY BACK FILLED AND COMPACTED.
4. THE SOILS REPORT IS AN INTEGRAL PART OF THE CONSTRUCTION DOCUMENTS. ANY INCONSISTENCIES OR CONFLICTS SHOULD BE BROUGHT TO OUR ATTENTION IMMEDIATELY, AND WAIT FOR OUR DIRECTION.
5. REFERENCE THE SOILS REPORT FOR OVER EXCAVATION AND RECOMPACTION, AND OPTIMUM MOISTURE LEVEL INSTRUCTIONS.
6. IT IS THE CONTRACTORS RESPONSIBILITY TO VERIFY FINAL GRADE ELEVATIONS, FOR MINIMUM FOOTING DEPTHS BELOW LOWEST ADJACENT GRADES AND MINIMUM COVERAGE OVER TOP OF FOOTINGS. ELEVATIONS OF FOOTINGS SHOWN ON THESE PLANS ARE ESTIMATES BASED ON THE INFORMATION AVAILABLE. FOOTING ELEVATIONS ARE SUBJECT TO CHANGE, AND ARE NOT FINAL TILL THE BUILDING PAD IS GRADED AND TRENCHES FOR FOOTINGS HAVE BEEN APPROVED BY THE SOILS ENGINEER OF RECORD.
7. THE CONTRACTOR IS TO VERIFY IF THE SOILS ENGINEER REQUIRES ADDITIONAL TESTING AT THE COMPLETION OF GRADING OF THE BUILDING PAD.
8. PRIOR TO BEING DELIVERED TO THE SITE, ALL IMPORTED SOIL SHALL BE TESTED AND APPROVED BY THE SOILS ENGINEER FOR CORROSIVITY AND SUITABILITY FOR THE FOUNDATION DESIGN.
9. BACKFILL BEHIND ALL RETAINING WALLS SHALL BE FREE DRAINING PER RECOMMENDATIONS OF THE SOILS REPORT.
10. EXCAVATION FOR ANY PURPOSE SHALL NOT REMOVE LATERAL SUPPORT FROM ANY FOUNDATION WITHOUT FIRST UNDERPINNING OR PROTECTING THE FOUNDATION AGAINST SETTLEMENT OR LATERAL TRANSLATION.
11. THE EXCAVATION OUTSIDE THE FOUNDATION SHALL BE BACKFILLED WITH SOIL THAT IS FREE OF ORGANIC MATERIAL, CONSTRUCTION DEBRIS, COBBLES AND BOULDERS OR WITH A CONTROLLED LOW-STRENGTH MATERIAL (CLSM). THE BACKFILL SHALL BE PLACED IN LIFTS AND COMPACTED IN A MANOR THAT DOES NOT DAMAGE THE FOUNDATION OR THE WATERPROOFING OR DAMPPROOFING MATERIAL.
    EXCEPTION: CLSM NEED NOT BE COMPACTED.
12. THE GROUND IMMEDIATELY ADJACENT TO THE FOUNDATION SHALL BE SLOPED AWAY FROM THE BUILDING AT A SLOPE OF NOT LESS THAN ONE UNIT VERTICAL IN 20 UNITS HORIZONTAL (5-PERCENT SLOPE) FOR A MINIMUM DISTANCE OF 10 FEET (3048 MM) MEASURED PERPENDICULAR TO THE FACE OF THE WALL. IF PHYSICAL OBSTRUCTIONS OR LOT LINES PROHIBIT 10 FEET (3048 MM) OF HORIZONTAL DISTANCE, A 5-PERCENT SLOPE SHALL BE PROVIDED TO AN APPROVED ALTERNATIVE METHOD OF DIVERTING WATER AWAY FROM FOUNDATION. SWALES USED FOR THIS PURPOSE SHALL BE SLOPED A MINIMUM OF 2 PERCENT WHERE LOCATED WITHIN 10 FEET (3048 MM) OF THE BUILDING FOUNDATION. IMPERVIOUS SURFACES WITHIN 10 FEET (3048 MM) OF THE BUILDING FOUNDATION SHALL BE SLOPED A MINIMUM OF 2 PERCENT AWAY FROM THE BUILDING.
    EXCEPTION: WHERE CLIMATIC OR SOIL CONDITIONS WARRANT, THE SLOPE OF THE GROUND AWAY FROM THE BUILDING FOUNDATION SHALL BE PERMITTED TO BE REDUCED TO NOT LESS THAN ONE UNIT VERTICAL IN 48 UNITS HORIZONTAL (2-PERCENT SLOPE).
    THE PROCEDURE USED TO ESTABLISH THE FINAL GROUND LEVEL ADJACENT TO THE FOUNDATION SHALL ACCOUNT FOR ADDITIONAL SETTLEMENT OF THE BACKFILL.

CALL BEFORE YOU DIG:

ONE EASY PHONE CALL TO 811 STARTS THE PROCESS TO GET YOUR UNDERGROUND PIPELINES AND UTILITY LINES MARKED FOR FREE. WHEN YOU CALL 811 FROM ANYWHERE IN THE COUNTRY, YOUR CALL WILL BE ROUTED TO YOUR STATE ONE-CALL CENTER. ONCE YOUR UNDERGROUND LINES HAVE BEEN MARKED FOR YOUR PROJECT, YOU WILL KNOW THE APPROXIMATE LOCATION OF YOUR PIPELINES AND UTILITY LINES, AND CAN DIG SAFELY. MORE INFORMATION REGARDING 811 CAN BE FOUND AT www.call811.com

EPOXY GROUTING NOTES:

1. FOR CONCRETE REPAIRS LESS THEN 3" IN THICKNESS USE: GROUT SHALL BE 'SIKA GROUT 212' NON-SHRINK OR EQUAL FOR CONCRETE REPAIR ONLY. EPOXY SHALL CONFORM TO ASTM C-1107.
2. CONTINUOUS INSPECTION BY A REGISTERED DEPUTY INSPECTOR IS REQUIRED FOR ALL GROUTING PROCEDURES.
3. SIMPSON 'SET-XP' EPOXY (ICC-ES ESR-2508, LARR 25744) ANCHORS SHALL BE USED WHERE EPOXY ANCHORS ARE SPECIFIED IN CONCRETE.
4. SIMPSON 'SET' EPOXY (ICC-ES ESR-1772, LARR 25279) ANCHORS SHALL BE USED WHERE EPOXY ANCHORS ARE SPECIFIED IN CMU.
5. CONTINUOUS INSPECTION BY A REGISTERED DEPUTY INSPECTOR IS REQUIRED FOR ALL EPOXY ANCHOR INSTALLATIONS.
6. SURFACE MUST BE CLEAN, SOUND AND FREE OF STANDING WATER. SURFACE MAY BE DRY OR DAMP. REMOVE ALL DIRT, LAITANCE, GREASE, CURING COMPOUND, IMPREGNATION'S OR ANY FOREIGN PARTICLES PRIOR TO PLACING EPOXY.
7. EPOXY SHALL BE MIXED PER MANUFACTURERS RECOMMENDATIONS. MIX ONLY THAT QUANTITY OF ADHESIVE THAT CAN BE USED WITHIN IT'S POT LIFE.
8. COMPLY WITH THE MANUFACTURER'S RECOMMENDATIONS FOR ALL PRODUCTS AND PROCEDURES.
9. HOLE DIAMETERS FOR PLACEMENT OF ANCHOR BOLTS, DOWELS AND PINS SHALL NOT EXTEND 1/4" GREATER THAN THE DIAMETER OF THE ANCHOR. THE DEPTH OF EMBEDMENT IS 10-15 TIMES THE BOLT DIAMETER MINIMUM, UNLESS OTHERWISE NOTED.
10. MINIMUM SUBSTRATE AND AMBIENT TEMPERATURE SHALL BE AS RECOMMENDED BY MANUFACTURER PRIOR TO PLACING EPOXY. DO NOT THIN EPOXY.

GENERAL STRUCTURAL NOTES:

1. THIS DOCUMENT IS AN INSTRUMENT OF PROFESSIONAL SERVICE PREPARED BY RGSE INC. ALTERATION OF THIS DOCUMENT BY ANY PARTY OTHER THAN RGSE INC. IS A VIOLATION OF LAW THAT WILL BE PROSECUTED TO ITS FULLEST EXTENT.
2. THE CONTRACTOR SHALL VERIFY ALL DIMENSIONS & CONDITIONS AT THE JOB SITE PRIOR TO STARTING CONSTRUCTION AND THE ARCHITECT/ENGINEER SHALL BE NOTIFIED OF ANY DISCREPANCIES OR INCONSISTENCIES.
3. AT ANY DISCREPANCIES OR CONFLICTS BETWEEN PLAN AND ELEVATION DIMENSIONS SHOWN ON THE ARCHITECTURAL DRAWINGS AND THE STRUCTURAL DRAWINGS, THE ARCHITECTURAL DIMENSIONS SHALL GOVERN. IF ANY OF THESE DIMENSIONS DIFFER BY MORE THAN 5%, THE ENGINEER SHALL BE NOTIFIED OF THE CONFLICT, AND THE CONTRACTOR SHALL WAIT FOR INSTRUCTIONS.
4. ALL PHASES OF WORK SHALL CONFORM TO THE MINIMUM STANDARDS OF THE LATEST LOCALLY ADOPTED CODE AND ALL RELEASED ADDENDUMS.
5. THE CONTRACT CONSTRUCTION DRAWINGS AND SPECIFICATIONS REPRESENT THE FINISHED STRUCTURE. UNLESS OTHERWISE NOTED, THEY DO NOT INDICATE THE METHOD OF CONSTRUCTION. THE CONTRACTOR SHALL PROVIDE ALL MEASURES NECESSARY TO PROTECT THE STRUCTURE, WORKMEN, AND OTHER PERSONS DURING CONSTRUCTION. SUCH MEASURES SHALL INCLUDE, BUT NOT LIMITED TO: BRACING, ALL SHORING, FORMS, AND SCAFFOLDING.
6. OPENINGS, POCKETS, ETC. SHALL NOT BE PLACED IN SLABS BEAMS, COLUMNS, WALLS, ETC., UNLESS SPECIFICALLY DETAILED ON THE STRUCTURAL DRAWINGS.
7. ALL ASTM SPECIFICATIONS NOTED ON THESE DRAWINGS SHALL BE OF THE LATEST REVISION.
8. IN THE EVENT THAT CERTAIN FEATURES OF CONSTRUCTION ARE NOT FULLY SHOWN ON THE DRAWINGS OR CALLED FOR IN THE NOTES OR SPECIFICATIONS. NOTIFY THE ARCHITECT/ENGINEER IMMEDIATELY & WAIT FOR INSTRUCTIONS.
9. COST OF ADDITIONAL DESIGN WORK NECESSITATED BY SELECTION OF AN OPTION OR DUE TO ERRORS OR OMISSIONS IN CONSTRUCTION, SHALL BE BORN BY THE CONTRACTOR.
10. WHERE DESIGN AND DETAILS OF PLATE GIRDERS, TRUSSES, ETC., IS TO BE PROVIDED BY FABRICATOR, CONTRACTOR SHALL SUBMIT CALCULATIONS PREPARED BY A CIVIL OR STRUCTURAL ENGINEER, TO THE ENGINEER AND TO THE BUILDING DEPARTMENT FOR REVIEW PRIOR TO FABRICATION.
11. UNLESS AN ITEM ON THE PLANS OR DETAILS IS SPECIFICALLY MARKED AS AN EXISTING ITEM, THE CONTRACTOR IS TO ASSUME THAT IT IS NEW, AND INCLUDE IT IN THE CONSTRUCTION BUDGET.
12. WHERE SOIL REPORT IS CITED, ITS REQUIREMENTS ADOPTED HEREIN.
13. ALL MANUFACTURED PRODUCTS MUST BE INSTALLED PER MANUFACTURER'S RECOMMENDATION.
14. WHILE EVERY REASONABLE EFFORT HAS BEEN MADE TO PROVIDE A BUILDABLE SET ON CONTRACT DOCUMENTS WITH MINIMAL ERRORS OR OMISSIONS, THE CONTRACTOR ACKNOWLEDGES AND UNDERSTANDS THAT THE CONTRACT DOCUMENTS MAY REPRESENT IMPERFECT DATA AND MAY CONTAIN ERRORS, OMISSIONS, CONFLICTS, INCONSISTENCIES, CODE VIOLATIONS AND IMPROPER USE OF MATERIALS. SUCH DEFICIENCIES WILL BE CORRECTED BY THE ARCHITECT OR HIS CONSULTANTS WHEN IDENTIFIED. THE CONTRACTOR AGREES TO CAREFULLY STUDY AND COMPARE THE INDIVIDUAL CONTRACT DOCUMENTS AND REPORT AT ONCE IN WRITING TO THE ARCHITECT ANY DEFICIENCIES THE CONTRACTOR MAY DISCOVER. THE CONTRACTOR FURTHER AGREES TO REQUIRE EACH SUBCONTRACTOR TO LIKEWISE STUDY THE DOCUMENTS AND TO REPORT AT ONCE ANY DEFICIENCIES DISCOVERED. THE CONSULTANT AND ARCHITECT, TOGETHER WITH CONTRACTOR SHALL RESOLVE ALL REPORTED DEFICIENCIES PRIOR TO STARTING ANY WORK. ANY QUESTIONABLE WORK PERFORMED PRIOR TO RESOLUTION OF CONFLICTS OR ERRORS OR FURTHER CLARIFICATION FROM THE ARCHITECT WILL BE DONE AT THE CONTRACTOR'S RISK.
15. OPTIONS, IF PROVIDED HEREIN, ARE FOR CONTRACTOR'S CONVENIENCE. HE SHALL BE RESPONSIBLE FOR ALL CHANGES NECESSARY, SHALL COORDINATE ALL DETAILS, AND SHALL OBTAIN ALL REQUIRED APPROVALS.
16. ANY MECHANICAL AND ELECTRICAL EQUIPMENT, STORAGE RACKS, SAFES, AND ANY OBJECT EXPECTED TO BE IN THE BUILDING THAT HAS AN OPERATIONAL WEIGHT (FULLY LOADED) GREATER THEN 400 LB. FLOOR OR ROOF MOUNTED, OR GREATER THEN 200 LB. SUSPENDED FROM A FLOOR, CEILING OR WALL SHALL BE SHOWN ON THESE DRAWINGS. IF THEY ARE NOT SHOWN ON THESE DRAWINGS, THEY SHALL BE BROUGHT TO THE ATTENTION OF THE STRUCTURAL ENGINEER, AND A CUT SHEET FOR THE SPECIFIC ITEM SHALL BE MADE AVAILABLE.
17. THE DEFERRED SUBMITTAL ITEMS SHALL BE SUBMITTED TO THE ARCHITECT OR ENGINEER OF RECORD WHO SHALL REVIEW AND APPROVE THEM, AND FORWARD THEM TO THE BUILDING OFFICIAL WITH A NOTATION INDICATING THAT THE DEFERRED SUBMITTAL DOCUMENTS HAVE BEEN REVIEWED AND APPROVED AND THAT THEY HAVE BEEN FOUND TO BE IN GENERAL CONFORMANCE WITH THE DESIGN OF THE BUILDING. THE DEFERRED SUBMITTAL ITEMS SHALL NOT BE INSTALLED UNTIL THEIR DESIGN AND SUBMITTAL DOCUMENTS HAVE BEEN APPROVED BY THE BUILDING OFFICIAL. PROVIDE AMPLE TIME FOR THE BUILDING OFFICIAL TO REVIEW THE DOCUMENTS.
18. CONSTRUCTION WASTE REDUCTION, DISPOSAL AND RECYCLING SHALL BE IN CONFORMANCE WITH THE REQUIREMENTS OF THE LATEST ADOPTED CALIFORNIA GREEN BUILDING CODE.
19. CONTRACTOR IS TO VERIFY THAT NO EXISTING STEEL REINFORCING, OR TENSION CABLES ARE DAMAGED WHEN INSTALLING POST INSTALLED WEDGE OR CHEMICAL ANCHORS. MECHANICAL ANCHORS ARE ONLY APPROVED FOR INTERIOR DRY USE, OTHERWISE CHEMICAL ANCHORS MUST BE USED.

SPECIAL INSPECTIONS:

1. SPECIAL INSPECTION U.N.O. BY A REGISTERED DEPUTY INSPECTOR APPROVED BY THE ARCHITECT AND/OR ENGINEER AND THE BUILDING DEPARTMENT SHALL BE EMPLOYED BY THE OWNER FOR THE FOLLOWING TYPES OF WORK:
    - A. ALL FOUNDATIONS DESIGNATED AS GRADE BEAMS, PIER FOOTINGS, OR PILES.
    - B. ALL WELDING. (EXCEPTIONS: WELDING DONE IN AN APPROVED FABRICATOR'S SHOP IN ACCORDANCE WITH AWS D1.1), ONLY PERIODIC INSPECTION IS REQUIRED FOR: SINGLE PASS FILLET WELDS LESS THEN 5/16", FLOOR AND ROOF DECK WELDS, WELDED STUDS ON A METAL DECK SYSTEM, WELDED COLD FOR STEEL, STAIRS, AND RAILING.
    - C. ALL POST INSTALLED CONCRETE OR MASONRY ANCHORS SUCH AS CHEMICAL AND MECHANICAL ANCHORS
    - D. ALL MASONRY U.N.O. ON THE DETAIL FOR MINOR STRUCTURES.
    - E. SEE C.B.C. VOL.II, SECTION 1704 FOR ADDITIONAL REQUIREMENTS. DEPUTY INSPECTION MAY BE WAVED FOR WORK THAT IS MINOR IN NATURE AS INTERPRETED BY THE BUILDING OFFICIAL.
2. THE SPECIAL INSPECTOR SHALL BE A QUALIFIED PERSON WHO SHALL DEMONSTRATE COMPETENCE, TO THE SATISFACTION OF THE BUILDING OFFICIAL, FOR INSPECTION OF THE PARTICULAR TYPE OF CONSTRUCTION OR OPERATION REQUIRING SPECIAL INSPECTION. THE SPECIAL INSPECTOR SHALL OBSERVE THE WORK ASSIGNED FOR CONFORMANCE TO THE APPROVED DESIGN DRAWINGS AND SPECIFICATIONS. THE SPECIAL INSPECTOR SHALL FURNISH INSPECTION REPORTS TO THE BUILDING OFFICIAL, THE ENGINEER OR ARCHITECT OF RECORD, AND OTHER DESIGNATED PERSONS. ALL DISCREPANCIES SHALL BE BROUGHT TO THE IMMEDIATE ATTENTION OF THE CONTRACTOR FOR CORRECTION, THEN, IF UNCORRECTED, TO THE PROPER DESIGN AUTHORITY AND TO THE BUILDING OFFICIAL. THE SPECIAL INSPECTOR SHALL SUBMIT A FINAL SIGNED REPORT STATING WHETHER THE WORK REQUIRING SPECIAL INSPECTION WAS, TO THE BEST OF THE INSPECTOR'S KNOWLEDGE, IN CONFORMANCE TO THE APPROVED PLANS AND SPECIFICATIONS AND THE APPLICABLE WORKMANSHIP PROVISIONS OF THE CODE PRIOR TO THE ISSUANCE OF THE CERTIFICATE OF OCCUPANCY.
3. EACH CONTRACTOR RESPONSIBLE FOR THE CONSTRUCTION OF A MAIN WIND-OR SEISMIC-FORCE-RESISTING SYSTEM, DESIGNATED SEISMIC SYSTEM OR A WIND-OR SEISMIC-RESISTING COMPONENT LISTED IN THE STATEMENT OF SPECIAL INSPECTION SHALL SUBMIT A WRITTEN STATEMENT OF RESPONSIBILITY TO THE BUILDING OFFICIAL AND THE OWNER PRIOR TO THE COMMENCEMENT OF WORK ON THE SYSTEM OR COMPONENT. THE CONTRACTOR'S STATEMENT OF RESPONSIBILITY SHALL CONTAIN THE FOLLOWING:
    - A. ACKNOWLEDGMENT OF AWARENESS OF THE SPECIAL REQUIREMENTS CONTAINED IN THE STATEMENT OF SPECIAL INSPECTIONS;
    - B. ACKNOWLEDGMENT THAT CONTROL WILL BE EXERCISED TO OBTAIN CONFORMANCE WITH CONSTRUCTION DOCUMENTS APPROVED BY THE BUILDING OFFICIAL;
    - C. PROCEDURES FOR EXERCISING CONTROL WITHIN THE CONTRACTOR'S ORGANIZATION, THE METHOD AND FREQUENCY OF REPORTING AND THE DISTRIBUTION OF THE REPORTS; AND
    - D. IDENTIFICATION AND QUALIFICATION OF THE PERSON(S) EXERCISING SUCH CONTROL AND THEIR POSITION(S) IN THE ORGANIZATION.

SHOP AND ERECTION DRAWINGS:

1. SHOP AND ERECTION DRAWINGS SERVE TO AID SUBCONTRACTORS IN THE PERFORMANCE OF THEIR WORK. THE CONTRACTOR SHALL REVIEW SUBMITTALS RECEIVED BY THEIR SUBCONTRACTORS FOR COMPLIANCE AND CONFORMANCE WITH THE REQUIREMENTS OF THE STRUCTURAL DRAWINGS AND MARK ANY DISCREPANCIES. SHOP AND ERECTION DRAWINGS SHALL INCORPORATE THE LATEST REVISIONS TO THE STRUCTURAL DRAWINGS AND THOSE THAT DO NOT SHALL BE FORWARDED TO THE DESIGN TEAM FOR REVIEW. THE CONTRACTOR SHALL ASSIGN A NUMBER TO EACH SUBMITTAL AND PROVIDE A REVIEW STAMP AND SIGNATURE.
2. WHERE THE FOLLOWING TYPES OF WORK ARE SHOWN IN THE PLANS, SHOP AND ERECTION DRAWINGS ARE REQUIRED:
    - A. STEEL STAIRS, HANDRAILS, GUARDRAILS, AND LANDINGS.
    - B. CURTAIN WALL, WINDOW WALL, LOUVER, AND GLAZING SYSTEMS.
    - C. FIRE SPRINKLER SUPPORT.
    - D. ELEVATOR GUIDERAILS, SUPPORT BRACKETS, MACHINE BEAMS, AND HOIST BEAMS.
3. INDIVIDUAL MEMBERS SHALL BE CROSS-REFERENCED TO GRIDLINES FOR PURPOSES OF LOCATION. WORK SHALL NOT BEGIN UNTIL THE SHOP AND ERECTION DRAWINGS REVIEWED BY THE STRUCTURAL ENGINEER ARE RECEIVED AT THE JOBSITE.
4. CORRECTIONS OR COMMENTS MADE BY THE STRUCTURAL ENGINEER ON THE SHOP AND ERECTION DRAWINGS DURING REVIEW DO NOT RELIEVE THE CONTRACTOR FROM COMPLIANCE WITH THE REQUIREMENTS OF THE DRAWINGS AND SPECIFICATIONS. REVIEW IS ONLY FOR GENERAL CONFORMANCE WITH THE DESIGN CONCEPT OF THE PROJECT AND GENERAL COMPLIANCE WITH THE INFORMATION GIVEN IN THE CONTRACT DOCUMENTS. THE CONTRACTOR IS RESPONSIBLE FOR CONFIRMING AND CORRELATING ALL QUANTITIES AND DIMENSIONS, SELECTING FABRICATION PROCESSES AND TECHNIQUES OF CONSTRUCTION, COORDINATING WORK WITH THAT OF ALL OTHER TRADES, AND PERFORMING HIS WORK IN A SAFE AND SATISFACTORY MANNER.
5. IN ORDER TO REDUCE THE POSSIBILITY OF ERRORS IN TRANSFERRING REDMARKS TO NUMEROUS COPIES OF RETURNED SHOP AND ERECTION DRAWINGS, ONLY ONE REPRODUCIBLE AND ONE COPY SHALL BE SENT TO THE STRUCTURAL ENGINEER FOR REVIEW. ONE REVIEW STAMPED REPRODUCIBLE WILL BE RETURNED. ADDITIONAL PRINTS FOR DISTRIBUTION BY THE CONTRACTOR CAN BE RUN FROM THE REPRODUCIBLE.

FIRE SPRINKLER SUPPORT:

1. DESIGN OF HANGERS, SWAY BRACING, AND ATTACHMENT TO THE STRUCTURE IS A DEFERRED SUBMITTAL ITEM. SEE DESIGN/BUILD NOTES FOR REQUIREMENTS.
2. CONTRACTOR SHALL SUBMIT DRAWINGS TO THE STRUCTURAL ENGINEER PRIOR TO THE START OF FRAMING. PROVIDE PIPE SIZES, WET PIPE WEIGHTS, AND PROPOSED DETAILS FOR ATTACHMENT. SIZE OF MEMBERS MAY BE SUBJECT TO CHANGE DUE TO PIPE LOCATIONS. INSTALLATION OF FRAMING SHALL NOT PROCEED UNTIL SHOP DRAWINGS AND METHOD OF STRENGTHENING, IF REQUIRED, HAVE BEEN DETERMINED.
3. LOCATE MAIN LINE NEAR COLUMNS AND ATTACH TO STEEL BEAMS, MANUFACTURED LUMBER, WOOD I-JOISTS, WOOD TRUSSES, STEEL JOISTS, AND CONCRETE BEAMS ONLY.
4. CONNECT BRANCH LINES TO STEEL BEAMS, CONCRETE OVER METAL DECK, MANUFACTURED LUMBER, WOOD I-JOISTS, WOOD TRUSSES, STEEL JOISTS, AND CONCRETE BEAMS ONLY. DO NOT CONNECT TO METAL DECK THAT DOES NOT HAVE STRUCTURAL CONCRETE FILL. CONNECTIONS FOR BRANCH LINES IN AREAS OF 2X FRAMING SHALL BE MADE TO DOUBLE 2X'S OR TO 4X'S, CONTRACTOR TO COORDINATE.
5. CONNECTIONS TO MANUFACTURED LUMBER SHALL OCCUR WITHIN THE MIDDLE THIRD OF THE MEMBER DEPTH.
6. THE METAL DECK, WOOD I-JOISTS, WOOD TRUSSES, AND STEEL JOIST MANUFACTURERS SHALL VERIFY ADEQUACY OF THEIR PRODUCTS TO SUPPORT HANGER LOADS. CONTACT THE MANUFACTURER FOR ACCEPTABLE CONNECTION DETAILS.

REVISIONS

NO.	REVISION	DATE
1	PC CORRECTIONS	09/06/17

RGSE inc. Structural
2720 Cochran St. Suite 8B
Simi Valley, CA 93065
P: 805.522.3379
F: 805.378.7137
info@rgseinc.com
www.rgseinc.com

NEW CONSTRUCTION & RENOVATIONS
STONEBRIDGE COMMUNITY CHURCH
4832 COCHRAN STREET
SIMI VALLEY, CA. 93063

SHEET TITLE :
GENERAL NOTES

JOB NO: 16307
DRAWN: raulg@rgseinc.com
ENGINEER: sokheanc@rgseinc.com
DATE: 02/14/17
STAMP:
RAMON GARCIA
No. 4595
Exp. 6/30/2017
STRUCTURAL
FOR PLAN CHECK ONLY

S0.0

FOR SI: 1 INCH.=25.4 MM.

g. FASTENERS SPACED 3" ON CENTER @ EXTERIOR EDGES & 6" ON CENTER @ INTERMEDIATE SUPPORTS, WHEN USED AS STRUCTURAL SHEATHING. SPACING SHALL BE 6" ON CENTER ON THE EDGES & 12" ON CENTER @ INTERMEDIATE SUPPORTS FOR NONSTRUCTURAL APPLICATIONS.
h. CORROSION-RESISTANT ROOFING NAILS WITH 7/16" DIAMETER HEAD & 1½" LENGTH FOR ½" SHEATHING & 1¾" LENGTH FOR 25/32" SHEATHING.
i. CORROSION-RESISTANT STAPLES WITH NOMINAL 7/16" CROWN & 1⅛" LENGTH FOR ½" SHEATHING & 1½" LENGTH FOR 25/32" SHEATHING. PANEL SUPPORTS @ 16" (20" IF STRENGTH AXIS IN THE LONG DIRECTION OF THE PANEL, UNLESS OTHERWISE MARKED).
j. CASING (1½"X0.080") OR FINISH (1½"X0.072") NAILS SPACED 6" ON PANEL EDGES, 12" @ INTERMEDIATE SUPPORTS.
k. PANEL SUPPORTS @ 24". CASING OR FINISH NAILS SPACED 6" ON PANEL EDGES, 12" @ INTERMEDIATE SUPPORTS.
l. FOR ROOF SHEATHING APPLICATIONS, 8d NAILS (2½"X0.113") ARE THE MINIMUM REQUIRED FOR WOOD STRUCTURAL PANELS.
m. STAPLES SHALL HAVE A MINIMUM CROWN WIDTH OF 7/16".
n. FOR ROOF SHEATHING APPLICATIONS, FASTENERS SPACED 4" ON CENTER @ EDGES, 8" @ INTERMEDIATE SUPPORTS.
o. FASTENERS SPACED 4" ON CENTER @ EDGES, 8" @ INTERMEDIATE SUPPORTS FOR SUBFLOOR & WALL SHEATHING & 3" ON CENTER @ EDGES, 6" @ INTERMEDIATE SUPPORTS FOR ROOF SHEATHING.
p. FASTENERS SPACED 4" ON CENTER @ EDGES, 8" @ INTERMEDIATE SUPPORTS.

STRUCTURAL STEEL:

1. STRUCTURAL STEEL:
PROVIDE STRUCTURAL STEEL COMPLYING WITH THE FOLLOWING ASTM STANDARD SPECIFICATIONS, UNLESS NOTED OTHERWISE:

PLATES	ASTM A36
PIPES	ASTM A53, GRADE B (35 KSI)
HOLLOW STRUCTURAL SECTIONS	ASTM A500, GRADE B (46 KSI)
STRUCTURAL STEEL NOTED THUS (50)	ASTM A572 OR A992, GRADE 50
ANCHOR BOLTS	ASTM F1554, GRADE 36
REINFORCING STEEL	SEE REINFORCING STEEL SECTION

WHERE NOTED ON PLANS AS (SS), SHALL BE STAINLESS STEEL 304 CONDITION (A). STAINLESS STEEL MECHANICAL TUBING SHALL BE PER ASTM A554-11 STANDARD SPECIFICATION, AND ALL STAINLESS BARS AND SHAPES SHALL BE PER ASTM A276-10 STANDARD SPECIFICATIONS.

FURNISH READILY IDENTIFIABLE STRUCTURAL STEEL COMPLYING WITH CBC 2203.

2. HIGH STRENGTH BOLTS, NUTS, AND WASHERS:
   A. TYPE: PROVIDE HIGH STRENGTH BOLTS, NUTS, AND WASHERS COMPLYING WITH ASTM A325, UNLESS NOTED OTHERWISE. HIGH STRENGTH BOLTS SHALL BE BEARING WITH THREADS INCLUDED IN SHEAR PLANE (A325-N), UNLESS NOTED OTHERWISE. PROVIDE SLIP-CRITICAL HIGH STRENGTH BOLTS (A325-SC) FOR SEISMIC MOMENT FRAME BEAM-TO-COLUMN CONNECTIONS, UNLESS NOTED OTHERWISE.
   B. INSTALLATION: INSTALL HIGH STRENGTH BOLTS COMPLYING WITH "SPECIFICATION FOR STRUCTURAL JOINTS USING HIGH-STRENGTH BOLTS" AND CBC SECTION 2204.2.
   C. TIGHTENING: TIGHTEN A325-N BOLTS TO A SNUG TIGHT CONDITION. TIGHTEN A325-SC BOLTS TO AT LEAST THE MINIMUM TENSION USING ONE OF THE FOLLOWING METHODS:
   TURN-OF-NUT, CALIBRATED WRENCH, OR DIRECT TENSION INDICATOR TIGHTENING.
3. WELDING:
   A. WELDING STANDARD: AWS D1.1 AND AISC 360 (AWS D1.8 AND AISC 341 FOR SEISMIC FORCE RESISTING SYSTEM)
   B. WELDING PROCESS: WELDING SHALL BE DONE BY ELECTRIC ARC USING E70XX ELECTRODES UNLESS NOTED OTHERWISE. SUBMERGED ARC PROCESS WITH AUTOMATIC WELDING (SAW-1) MAY BE USED AS AN ALTERNATE.
   C. PRE-QUALIFIED & NON PRE-QUALIFIED WELDS: WELDS SHALL BE PRE-QUALIFIED COMPLYING WITH WELDING STANDARD. WHERE NON PRE-QUALIFIED WELDS ARE SPECIFICALLY INDICATED, QUALIFY BY TESTING AND PROCEDURE QUALIFICATION TEST RECORD COMPLYING WITH WELDING STANDARD.
   D. WELDER CERTIFICATION: WELDERS SHALL BE CERTIFIED AS REQUIRED BY GOVERNING CODE AUTHORITY.
   E. SHOP WELDING INCLUDING ULTRASONIC TESTING OF COMPLETE PENETRATION GROOVE WELDS WELDED IN SHOP: PERFORM ON PREMISES OF AN APPROVED FABRICATOR COMPLYING WITH CBC SECTION 1704.2.5.2.
   F. MINIMUM FILLET WELD SIZE: PROVIDE MINIMUM FILLET WELD COMPLYING WITH AISC 360 SECTION J2 AND TABLE J2.4 UNLESS A LARGER WELD IS INDICATED ON DRAWINGS.
   G. SHOP AND FIELD WELDING INDICATION ON DRAWINGS: NO ATTEMPT IS MADE TO DIFFERENTIATE BETWEEN SHOP AND FIELD WELDED CONNECTIONS.
4. WELD INSPECTION:
   A. LEAD WELDING INSPECTOR CERTIFICATION: LEAD WELDING INSPECTOR SHALL BE A CERTIFIED WELDING INSPECTOR (CWI) COMPLYING WITH AWS-QC1 STANDARDS, SHALL BE RECOGNIZED BY THE BUILDING OFFICIAL AS A REGISTERED DEPUTY INSPECTOR FOR STRUCTURAL STEEL WELDING (ICC CERTIFICATION) AND SHALL POSSES A MINIMUM LEVEL OF UT LEVEL II CERTIFICATION.
   B. OTHER WELDING INSPECTORS: WELDING INSPECTORS PERFORMING VISUAL INSPECTION UNDER THE SUPERVISION OF THE LEAD WELDING INSPECTOR SHALL POSSES ICC CERTIFICATION, AND PERSONS PERFORMING NON-DESTRUCTIVE TESTING SHALL POSSES UT LEVEL II CERTIFICATION. FOUR NON-CERTIFIED WELDING INSPECTORS MAXIMUM SHALL BE UNDER THE SUPERVISION OF A CWI.
   C. WELD INSPECTIONS: PROVIDE WELD INSPECTIONS AS REQUIRED BY CBC SECTION 1705.2 AND AISC 360 CHAPTER N (AISC 341 CHAPTER J FOR SEISMIC FORCE RESISTING SYSTEM). SEE STATEMENT OF SPECIAL INSPECTION AND QUALITY ASSURANCE SECTION.
5. THE STRUCTURAL STEEL FABRICATOR SHALL FURNISH SHOP DRAWINGS OF ALL STEEL FOR THE ENGINEERS REVIEW PRIOR TO FABRICATION. ALL STEEL FABRICATION SHALL BE PERFORMED IN A SHOP APPROVED BY THE BUILDING DEPARTMENT.
6. EXCEPT WHERE ENCASED IN CONCRETE, MASONRY, OR SPRAYED-ON FIREPROOFING, ALL STEEL SHALL BE PRIMERED UNLESS NOTED OTHERWISE ON THE DRAWINGS. PAINTING OF STRUCTURAL STEEL MEMBERS SHALL COMPLY WITH THE REQUIREMENTS CONTAINED IN AISC 360.
7. OPENINGS SHALL NOT BE PLACED IN STEEL MEMBERS UNLESS SPECIFICALLY DETAILED. STEEL MEMBERS SHALL BE SHORED WHEN PERMISSIBLE HOLES ARE CUT WITH A TORCH AFTER STEEL IS ERECTED. THE SHORES SHALL REMAIN IN PLACE UNTIL THE STEEL TEMPERATURE HAS RETURNED TO AIR TEMPERATURE.
8. STRUCTURAL STEEL SHALL BE DELIVERED TO THE JOB SITE FREE OF EXCESSIVE RUST, MILL SCALE, GREASE, ETC. AND SHALL BE PRIMED.
9. WHERE WELDING TO EXISTING BEAMS ARE SHOWN, IT IS THE CONTRACTOR'S RESPONSIBILITY TO DETERMINE AND PROVIDE ADEQUATE SHORING OF EXISTING BEAMS FOR LOSS OF STRENGTH DUE TO HEAT DURING WELDING.
10. NON-SHRINK GROUTS OR DRY-PACKS SHALL BE 6000 PSI MIN. ASTM C109 W/ SPECIAL INSPECTION REQUIRED TYP.
11. ALL ARCHITECTURALLY EXPOSED STRUCTURAL STEEL (AESS) SHALL MEET THE MINIMUM SPECIFICATIONS IN THE AISC CODE OF STANDARD PRACTICE CHAPTER 10 UNLESS NOTED OTHERWISE ON THE ARCHITECTURAL DRAWINGS.
12. DEMAND CRITICAL WELDS:
WELDS DESIGNATED AS DEMAND CRITICAL SHALL BE MADE WITH FILLER METALS MEETING THE REQUIREMENTS SPECIFIED IN AWS D1.8M CLAUSE 6.3.

USER NOTE: AWS D1.8/D1.8M REQUIRES THAT ALL SEISMIC FORCE RESISTING SYSTEM WELDS ARE TO BE MADE WITH FILLER METALS CLASSIFIED USING AWS A5 STANDARDS THAT ACHIEVE THE FOLLOWING MECHANICAL PROPERTIES.

PROPERTY	CLASSIFICATION	
	70 KSI (480 MPa)	80 KSI (550 MPa)
YIELD STRENGTH, KSI (MPa)	58 (400) MIN.	68 (470) MIN.
TENSILE STRENGTH, KSI (MPa)	70 (480) MIN.	80 (550) MIN.
ELONGATION, %	22 MIN.	19 MIN.
CVN TOUGHNESS, ft-lb (J)	20 (27) MIN. @ 0°F (−18°C)[a]	

a. FILLER METALS CLASSIFIED AS MEETING 20 ft-lb (27 J) MIN. AT A TEMPERATURE LOWER THAN 0°F (−18°C) ALSO MEET THIS REQUIREMENT.

IN ADDITION TO THE ABOVE REQUIREMENTS, AWS D1.8/D1.8M REQUIRES, UNLESS OTHERWISE EXEMPTED FROM TESTING, THAT ALL DEMAND CRITICAL WELDS ARE TO BE MADE WITH FILLER METALS RECEIVING HEAT INPUT ENVELOPE TESTING THAT ACHIEVE THE FOLLOWING MECHANICAL PROPERTIES IN THE WELD METAL:

MECHANICAL PROPERTIES FOR DEMAND CRITICAL WELDS

PROPERTY	CLASSIFICATION	
	70 KSI (480 MPa)	80 KSI (550 MPa)
YIELD STRENGTH, KSI (MPa)	58 (400) MIN.	68 (470) MIN.
TENSILE STRENGTH, KSI (MPa)	70 (480) MIN.	80 (550) MIN.
ELONGATION, %	22 MIN.	19 MIN.
CVN TOUGHNESS, ft-lb (J)	40 (54) MIN. @ 70°F (20°C)[b,c]	

b. FOR LAST OF +50°F (+10°C). FOR LAST LESS THAN +50°F (+10°C), SEE AWS D1.8/D1.8M SUB-CLAUSE 6.3.6.
c. TESTS CONDUCTED IN ACCORDANCE WITH AWS D1.8/D1.8M ANNEX A MEETING 40 ft-lb (54 J) MIN. AT A TEMPERATURE LOWER THAN +70°F (+20°C) ALSO MEET THIS REQUIREMENT.

13. STRUCTURAL STEEL H-PILES AND STRUCTURAL STEEL SHEET PILING SHALL CONFORM TO THE MATERIAL REQUIREMENTS IN ASTM A6. STEEL PIPE PILES SHALL CONFORM MATERIAL REQUIREMENTS IN ASTM A252. FULLY WELDED STEEL PIPES SHALL BE FABRICATED FROM PLATES THAT CONFORM TO THE MATERIAL REQUIREMENTS IN ASTM A36, ASTM A283, ASTM A572, ASTM A588 OR ASTM A690.

FASTENING SCHEDULE TABLE 2304.9.1

CONNECTION	FASTENING[a,m]	LOCATION
1. JOIST TO SILL OR GIRDER	(3)8d COMMON (2½"X0.131") (3)3"X0.131" NAILS (3)3" 14 GAGE STAPLES	TOENAIL
2. BRIDGING TO JOIST	(2)8d COMMON (2½"X0.131") (2)3"X0.131" NAILS (2)3" 14 GAGE STAPLES	TOENAIL EACH END
3. 1"X6" SUBFLOOR OR LESS TO EA. JOIST	(2)8d COMMON (2½"X0.131")	FACE NAIL
4. WIDER THAN 1"X6" SUBFLOOR TO EA. JOIST	(3)8d COMMON (2½"X0.131")	FACE NAIL
5. 2" SUBFLOOR TO JOIST OR GIRDER	(2)16d COMMON (3½"X0.162")	BLIND AND FACE NAIL
6. SOLE PLATE TO JOIST OR BLOCKING	16d (3½"X0.135") @ 16"O.C. 3"X0.131" NAILS @ 8"O.C. 3" 14 GAGE STAPLES @ 12"O.C.	TYPICAL FACE NAIL
-SOLE PLATE TO JOIST OR BLOCKING AT BRACED WALL PANEL	3" 16d (3½"X0.135") @ 16" (4)3"X0.131" NAILS @ 16" (4)3" 14 GAGE STAPLES PER 16"	BRACED WALL PANELS
7. TOP PLATE TO STUD	(2)16d COMMON (3½"X0.162") (3)3"X0.131" NAILS (3)3" 14 GAGE STAPLES	END NAIL
8. STUD TO SOLE PLATE STAGG. NAILING ALL CASES	(4)8d COMMON (2½"X0.131") (4)3"X0.131" NAILS (3)3" 14 GAGE STAPLES	TOENAIL
	(2)20d COMMON (3½"X0.162") (3)3"X0.131" NAILS (3)3" 14 GAGE STAPLES	ENDNAIL
9. DOUBLE STUDS	16d (3½"X0.135") @ 24"O.C. 3"X0.131" NAIL @ 8"O.C. 3" 14 GAGE STAPLE @ 8"O.C.	FACE NAIL
10. DOUBLE TOP PLATES	16d (3½"X0.135") @ 16"O.C. 3"X0.131" NAIL @ 12"O.C. 3" 14 GAGE STAPLE @ 12"O.C.	TYPICAL FACE NAIL
-DOUBLE TOP PLATES	(16)16d COMMON (3½"X0.162") (24)3"X0.131" NAILS (24)3" 14 GAGE STAPLES	LAP SPLICE
11. BLOCKING BETWEEN JOISTS OR RAFTERS TO TOP PLATE	(3)8d COMMON (2½"X0.131") (3)3"X0.131" NAILS (3)3" 14 GAGE STAPLES	TOENAIL
12. RIM JOIST TO TOP PLATE	8d (2½"X0.131") @ 6"O.C. 3"X0.131" NAILS @ 6"O.C. 3" 14 GAGE STAPLES @ 6"O.C.	TOENAIL
13. TOP PLATES, LAPS, AND INTERSECTIONS	(2)16d COMMON (3½"X0.162") (3)3"X0.131" NAILS (3)3" 14 GAGE STAPLES	FACE NAIL
14. CONTINUOUS HEADER, TWO PIECES	(2)16d COMMON (3½"X0.162")	16"O.C. ALONG EDGE
15. CEILING JOISTS TO PLATE	(3)8d COMMON (2½"X0.131") (5)3"X0.131" NAILS (5)3" 14 GAGE STAPLES	TOENAIL
16. CONTINUOUS HEADER TO STUD	(4)8d COMMON (2½"X0.131")	TOENAIL
17. CEILING JOISTS, LAPS OVER PARTITIONS (SEE SECTION 2308.10.4.1, TABLE 2308.10.4.1)	(3)16d COMMON (3½"X0.162") MIN. TABLE 2308.10.4.1 (4)3"X0.131" NAILS (4)3" 14 GAGE STAPLES	FACE NAIL
18. CEILING JOISTS TO PARALLEL RAFTERS (SEE SECTION 2308.10.4.1, TABLE 2308.10.4.1)	(3)16d COMMON (3½"X0.162") MIN. TABLE 2308.10.4.1 (4)3"X0.131" NAILS (4)3" 14 GAGE STAPLES	FACE NAIL
19. RAFTER TO PLATE (SEE SECTION 2308.10.1, TABLE 2308.10.1)	(3)8d COMMON (2½"X0.131") (3)3"X0.131" NAILS (3)3" 14 GAGE STAPLES	TOENAIL
20. 1" DIAGONAL BRACE TO EA. STUD & PLATE	(2)8d COMMON (2½"X0.131") (2)3"X0.131" NAILS (3)3" 14 GAGE STAPLES	FACE NAIL
21. 1"X8" SHEATHING TO EA. BEARING	(3)8d COMMON (2½"X0.131")	FACE NAIL
22. WIDER THAN 1"X8" SHEATHING TO EA. BEARING	(3)8d COMMON (2½"X0.131")	FACE NAIL
23. BUILT-UP CORNER STUDS	16d COMMON (3½"X0.162") 3"X0.131" NAILS 3" 14 GAGE STAPLES	24"O.C. 16"O.C. 16"O.C.
24. BUILT-UP GIRDER AND BEAMS	20d COMMON (4"X0.192") 32"O.C. 3"X0.131" NAILS @ 24"O.C. 3" 14 GAGE STAPLES @ 24"O.C.	FACE NAIL @ TOP AND BOTTOM STAGGERED ON OPPOSITE SIDES
	(2)20d COMMON (4"X0.192") (3)3"X0.131" NAILS (3)3" 14 GAGE STAPLES	FACE NAIL @ ENDS AND @ EA. SPLICE
25. 2" PLANKS	16d COMMON (3½"X0.162")	@ EACH BEARING
26. COLLAR TIE TO RAFTER	(3)10d COMMON (3"X0.148") (4)3"X0.131" NAILS (4)3" 14 GAGE STAPLES	FACE NAIL
27. JACK RAFTER TO HIP	(3)10d COMMON (3"X0.148") (4)3"X0.131" NAILS (4)3" 14 GAGE STAPLES	TOENAIL
	(2)16d COMMON (3½"X0.162") (3)3"X0.131" NAILS (3)3" 14 GAGE STAPLES	FACE NAIL
28. ROOF RAFTER TO 2-BY RIDGE BEAM	(2)16d COMMON (3½"X0.162") (3)3"X0.131" NAILS (3)3" 14 GAGE STAPLES	TOENAIL
	(2)16d COMMON (3½"X0.162") (3)3"X0.131" NAILS (3)3" 14 GAGE STAPLES	FACE NAIL
29. JOIST TO BAND JOIST	(3)16d COMMON (3½"X0.162") (4)3"X0.131" NAILS (4)3" 14 GAGE STAPLES	FACE NAIL
30. LEDGER STRIP	(3)16d COMMON (3½"X0.162") (4)3"X0.131" NAILS (4)3" 14 GAGE STAPLES	FACE NAIL
31. WOOD STRUCTURAL PANELS & PARTICLEBOARD[b] SUBFLOOR, ROOF & WALL SHEATHING (TO FRAMING)	½" AND LESS 6d[c,l] 2⅜"X0.113" NAIL[n] 1¾" 16 GAGE[o]	
	19/32" TO ¾" 8d[d] OR 6d[e] 2⅜"X0.113" NAIL[p] 2" 16 GAGE[p]	
	⅞" TO 1" 8d[c]	
	1⅛" TO 1¼" 10d[d] OR 8d[d]	
-SINGLE FLOOR (COMBINATION SUBFLOOR-UNDERLAYMENT TO FRAMING)	¾" AND LESS: 6d[e] ⅞" TO 1": 8d[e] 1⅛" TO 1¼": 10d[d] OR 8d[e]	
32. PANEL SIDING (TO FRAMING)	½" OR LESS: 6d[f] ⅝": 8d[f]	
33. FIBERBOARD SHEATHING[g]	½" NO.11 GAGE ROOFING NAIL[h], 6d COMMON NAIL (2"X0.113") NO.16 GAGE STAPLE[i]	
	25/32" NO.11 GAGE ROOFING NAIL[h] 8d COMMON NAIL (2½"X0.131") NO.16 GAGE STAPLE[i]	
34. INTERIOR PANELING	¼": 4d[j] ⅜": 6d[k]	

FOR SI: 1 INCH.=25.4 MM.

a. COMMON OR BOX NAILS ARE PERMITTED TO BE USED EXCEPT WHERE OTHERWISE STATED.
b. NAILS SPACED @ 6" ON CENTER @ EDGES, 12" @ INTERMEDIATE SUPPORTS EXCEPT 6" @ SUPPORT WHERE SPANS ARE 48" OR MORE. FOR NAILING OF WOOD STRUCTURAL PANEL & PARTICLEBOARD DIAPHRAGMS & SHEAR WALLS, REFER TO SECTION 2305. NAILS FOR WALL SHEATHING ARE PERMITTED TO BE COMMON, BOX OR CASING.
c. COMMON OR DEFORMED SHANK (6d-2"X0.113"; 8d- 2½"X0.131"; 10d-3"X0.148").
d. COMMON (6d-2"X0.113"; 8d-2½"X0.131"; 10d-3"X0.148").
e. DEFORMED SHANK (6d-2"X0.113" 8d-2½"X0.131"; 10d-3"X0.148").
f. CORROSION-RESISTANT SIDING(6d-1⅞"X0.106"; 8d-2⅜"X0.128") OR CASING (6d-2"X0.099"; 8d-2½"X0.113") NAIL.

FRAMING LUMBER:

1. ALL FRAMING LUMBER SHALL BE COAST REGION DOUGLAS FIR-LARCH & SHALL CONFORM TO THE FOLLOWING GRADES AS ESTABLISHED BY THE W.C.L.I.B. SAWN LUMBER, MACHINE STRESS-RATED OR MACHINE-EVALUATED LUMBER, SHALL BE IDENTIFIED BY THE GRADE MARK OF LUMBER GRADING OR INSPECTION AGENCY THAT HAS BEEN APPROVED BY AN ACCREDITATION BODY THAT COMPLIES WITH DOC PS 20 OR EQUIVALENT.:
   A. STUDS: (EXCEPT AS NOTED ON DRAWINGS)
      1. 2"-4" THICK, 2"-4" WIDE, INTERIOR, NON-BEARING PARTITIONS, STANDARD GRADE.
      2. 2"-4" THICK, NO.2 OR BETTER DF.
   B. JOISTS AND RAFTERS: (EXCEPT AS NOTED ON DRAWINGS)
      1. 2"-4" THICK, 2"-4" WIDE, NO.2
      2. 2"-4" THICK, 5" AND WIDER, NO.2
   C. BEAMS AND HEADERS: (EXCEPT AS NOTED ON DRAWINGS)
      1. 2"-4" THICK, 5" AND WIDER, NO.1
      2. 5" AND THICKER, NO.1
   D. POSTS: ALL POSTS NO.1
   E. TOP PLATES: 2 X 4 NO.1 2 X 6 NO.2 OR BETTER
   F. BLOCKING: STANDARD GRADE
   G. SILL PLATES:
      1. EXTERIOR AND SHEAR WALLS 2 X OR 3X NO.2 PRESSURE TREATED
      2. INTERIOR PARTITIONS 2 X 4 STANDARD GRADE. OR BETTER.
2. ALL FRAMING ANCHORS, CLIPS, STRAPS, HANGERS, ETC., SHALL BE MANUFACTURED BY SIMPSON COMPANY OR I.C.C. APPROVED EQUAL WITH 5% TOLERANCE.
3. HY-TEK FASTENERS MAY BE USED AS AN APPROVED EQUAL IN LIEU OF COMMON, SHORT, BOX, SINKER NAILS, AND SIMPSON SDS SCREWS AS APPROVED IN ICC-ES ESR-2648 (LARR 25959 IN THE CITY OF LOS ANGELES).
4. ALL BEAM AND JOIST HANGERS SHALL BE THE FULL DEPTH OF THE MEMBER IT IS SUPPORTING.
5. ALL BEAM AND JOIST METAL HANGERS SHALL HAVE ALL HOLES FILLED PER MANUF. TO ACHIEVE MAX CAPACITY.
6. TYPICAL ROOF SHEATHING SHALL BE 5 PLY. WITH THICKNESS & PANEL INDEX LUMBER AS INDICATED ON THE DRAWINGS. STAGGER SHEETS 4'-0". FACE GRAIN SHALL BE PERPENDICULAR TO THE SUPPORTS. PLYWOOD SHALL BE NAILED AS INDICATED ON THE DRAWINGS.
7. MAXIMUM UNFRAMED HOLES IN SHEATHING SHALL BE 3" IN DIAMETER. WHERE POSSIBLE, LOCATE HOLE IN WALL MIDWAY BETWEEN THE JOISTS. WHERE SQUARE HOLES ARE CUT, DO NOT RUN SAW BEYOND THE CORNER OF THE OPENING.
8. ALL WOOD SHEATHING SHALL BE APA RATED EXPOSURE 1 UNO. WHERE PLYWOOD IS PERMANENTLY EXPOSED TO WEATHER, OR USED IN DECKS, THE EXPOSURE RATING SHALL BE EXTERIOR. WOOD STRUCTURAL PANELS SHALL CONFORM TO THE REQUIREMENTS FOR THEIR TYPE IN DOC PS 1 OR PS 2. EACH PANEL OR MEMBER SHALL BE IDENTIFIED FOR GRADE AND GLUE TYPE BY THE TRADEMARKS OF AN APPROVED TESTING AND GRADING AGENCY. DIAPHRAGMS STRUCTURAL I U.N.O.
9. WHERE ROOF AND/OR FLOOR SHEATHING IS NAILED AT 2 1/2" O.C., ALL FRAMING INCLUDING BLOCKING SHALL BE 3X NOMINAL.
10. OSB IS AN ACCEPTABLE ALTERNATIVE TO PLYWOOD AT SHEAR WALLS, ROOF SHEATHING, AND FLOOR SHEATHING WHEN THE OWNER APPROVES THE SUBSTITUTION.
11. ALL EDGE NAILING ON SHEAR WALL PLY. SHALL MAINTAIN A 3/8" MIN. CLR. DISTANCE @ ALL BOUNDARY NAILING ON ROOF OR FLOOR PLYWOOD SHEATHING SHALL MAINTAIN A 3/8" MIN. CLR.
12. FASTENERS IN CONTACT WITH PRESERVATIVE-TREATED WOOD SHALL BE HOT-DIPPED ZINC-COATED GALVANIZED STEEL, STAINLESS STEEL, SILICON BRONZE OR COPPER. FASTENERS OTHER THAN NAIL, TIMBER RIVETS, WOOD SCREWS AND LAG SCREWS SHALL BE PERMITTED TO BE OF MECHANICALLY DEPOSITED ZINC-COATED STEEL WITH COATING WEIGHTS IN ACCORDANCE WITH ASTM B 695, CLASS 55 MINIMUM. CONNECTORS THAT ARE USED IN EXTERIOR APPLICATIONS AND IN CONTACT WITH PRESERVATIVE-TREATED WOOD SHALL HAVE COATING TYPES AND WEIGHTS IN ACCORDANCE WITH THE TREATED WOOD OR CONNECTOR MANUFACTURER'S RECOMMENDATIONS. IN THE ABSENCE OF MANUFACTURER'S RECOMMENDATIONS, A MINIMUM OF ASTM A 653, TYPE G185 ZINC-COATED GALVANIZED STEEL, OR EQUIVALENT, SHALL BE USED. EXCEPTION: PLAIN CARBON STEEL FASTENERS IN SBX/DOT AND ZINC BORATE PRESERVATIVE-TREATED WOOD IN AN INTERIOR, DRY ENVIRONMENT SHALL BE PERMITTED.
13. GRADE AND SPECIES OF ALL LUMBER MUST BE GRADE MARKED.
14. ALL DIAPHRAGMS AND SHEAR WALL NAILING SHALL UTILIZE COMMON NAILS OR GALVANIZED BOX.
15. ALL BOLTS SHALL BE DRILLED 1/32 TO 1/16" OVERSIZED.
16. ALL LUMBER SHALL BE DRY TO 19% AND PLYWOOD 15% MAX MOISTURE CONTENT AT TIME OF WRAPPING EXCEPT FOR BLOCKING. LUMBER THAT IS ARCHITECTURALLY EXPOSED AND SENSITIVE TO WARPING, SAP, AND SPLITTING SHALL BE KILN DRY.
17. WHERE ROUGH CARPENTRY IS EXPOSED TO WEATHER, IN GROUND CONTACT, PRESSURE-PRESERVATIVE TREATED, OR IN AREA OF HIGH RELATIVE HUMIDITY, PROVIDE FASTENERS WITH HOT-DIP ZINC COATING COMPLYING WITH ASTM A 153/A 153M OR TYPE 304 STAINLESS STEEL.
18. LAG SCREWS SHALL BE BORED AS FOLLOWS:
   A. THE CLEARANCE HOLE FOOT THE SHANK SHALL HAVE THE SAME DIAMETER AS THE SHANK, AND THE SAME DEPTH OF PENETRATION AS THE LENGTH OF UNTHREADED SHANK.
   B. THE LEAD HOLE FOR THE THREADED PORTION SHALL HAVE A DIAMETER EQUAL TO 40%-70% IN WOOD W/G $\le$ 0.5 AND A LENGTH EQUAL TO AT LEAST THE LENGTH OF THE THREADED PORTION. THE LARGER PERCENTILE IN EA. RANGE SHALL APPLY TO LAG SCREWS OF GREATER DIAMETERS.
   LEAD HOLES OR CLEARANCE HOLES SHALL NOT BE REQUIRED FOR 3/8" AND SMALLER DIAMETER LAG SCREWS LOADED PRIMARILY IN WITHDRAWAL IN WOOD W/ G $\le$ 0.5, PROVIDED THAT EDGE DISTANCES, END DISTANCES, AND SPACING ARE SUFFICIENT TO PREVENT UNUSUAL SPLITTING.
   THE THREADED PORTION OF THE LAG SCREW SHALL BE INSERTED IN ITS LEAD HOLE BY TURNING WITH A WRENCH, NOT BY DRIVING W/ A HAMMER.
   SOAP OR OTHER LUBRICANT SHALL NOT BE USED ON THE LAG SCREWS OR IN THE LEAD HOLES TO FACILITATE INSERTION AND PREVENT DAMAGE TO THE SCREW.
   D = UNTHREADED SHANK DIAMETER
   S = UNTHREADED SHANK LENGTH
   Dr = ROOT DIAMETER OF THREADED PORTION
   T = THREAD LENGTH
   W = WIDTH OF HEAD ACROSS FLATS
   E = LENGTH OF TAPERED TIP
   H = HEIGHT OF HEAD
   M = NUMBER OF THREADS/INCH

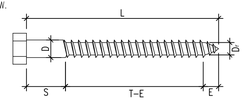

19. ROOF DIAPHRAGM NAILING TO BE INSPECTED BEFORE COVERING. STRENGTH AXIS OF WOOD STRUCTURAL PANEL SHALL BE PERPENDICULAR TO SUPPORTS. FLOOR DIAPHRAGMS SHALL BE TONGUE AND GROOVE OR HAVE BLOCKED PANEL EDGES. WOOD STRUCTURAL PANEL SPANS SHALL CONFORM TO CBC TABLE 2304.7.

△1

20. MECHANICALLY DRIVEN NAILS USED IN WOOD STRUCTURAL PANELS SHALL MEET THE SAME DIMENSIONS AS THAT REQUIRED FOR HAND-DRIVEN NAILS, INCLUDING DIAMETER, MINIMUM LENGTH AND MINIMUM HEAD DIAMETER. CLIPPED HEAD OR BOX NAILS ARE NOT ACCEPTABLE. (CBC 2305.3.12, ORDINANCE 1167)
21. NAILS SHALL BE PLACED NOT LESS THAN ½" IN FROM THE PANEL EDGES AND NOT LESS THAN ⅜" FROM THE EDGES OF THE CONNECTING MEMBERS FOR SHEAR GREATER THAN 350plf. NAILS SHALL BE PLACED NOT LESS THAN ⅜" FROM THE PANEL EDGES AND NOT LESS THAN ¼" FROM THE EDGE OF THE CONNECTING MEMBERS FOR SHEARS OF 350plf OR LESS. (SVBC 2306.4.1, ORDINANCE NO. 1219)

TYPICAL NAIL DIMENSIONS

TYPE		PENNY-WEIGHT										
		6d	7d	8d	10d	12d	16d	20d	30d	40d	50d	60d
COMMON	LENGTH	2	2¼	2½	3	3¼	3½	4	4½	5	5½	6
	DIAMETER	0.113	0.113	0.131	0.148	0.148	0.162	0.192	0.207	0.225	0.244	0.263
	HEAD	0.266	0.266	0.281	0.312	0.312	0.344	0.406	0.438	0.469	0.500	0.531
BOX	LENGTH	2	2¼	2½	3	3¼	3½	4	4½	5		
	DIAMETER	0.099	0.099	0.113	0.128	0.128	0.135	0.148	0.148	0.162		
	HEAD	0.266	0.266	0.297	0.312	0.312	0.344	0.375	0.375	0.406		
SINKER	LENGTH	1⅞	8⅛	2⅜	2⅞	3⅛	3¼	3¾	4¼	4¾		5¾
	DIAMETER	0.092	0.099	0.113	0.120	0.135	0.148	0.177	0.192	0.207		0.244
	HEAD	0.234	0.250	0.266	0.281	0.312	0.344	0.375	0.406	0.438		0.500

MASONRY:

1. BLOCK SHALL BE MEDIUM WEIGHT UNITS CONFORMING TO ASTM C-90 GRADE N-1. USE UNITS OPEN ONE END, AND BOND BEAM UNITS AT HORIZONTAL REINFORCING. WHEN BLOCKS ARE EXPOSED OBTAIN APPROVAL OF SUBMITTAL FROM ARCHITECT. MORTAR SHALL ATTAIN A MINIMUM COMPRESSIVE STRENGTH AS REQUIRED TO MEET THE COMPRESSIVE STRENGTH OF MASONRY f'm SPECIFIED ON THE PLANS AS FOLLOWS:
   A. 1,900 PSI FOR SPECIFIED f'm UP TO 1,500 PSI
   B. 2,800 PSI FOR SPECIFIED f'm UP TO 2,000 PSI
   C. 3,750 PSI FOR SPECIFIED f'm UP TO 2,500 PSI
   D. 4,800 PSI FOR SPECIFIED f'm UP TO 3,000 PSI
2. MIN. SPECIFIED COMPRESSIVE STRENGTH SHALL BE f'm = 2,000 PSI, UNLESS OTHERWISE SPECIFIED ON THE PLANS.
3. CEMENT: ASTM C-150, LOW ALKALI, TYPE I OR II PORTLAND CEMENT. (MASONRY CEMENT AND PLASTIC CEMENT SHALL NOT BE USED.)
4. MORTAR:
   A. CONFORMING TO ASTM C-270, TYPE [S].
   B. MIX PROPORTIONS SHALL CONFORM TO ASTM C-270.
   C. AGGREGATES SHALL CONFORM TO ASTM C-144.
5. GROUT:
   A. CONFORMING TO ASTM C-476.
   B. ATTAINS THE MASONRY COMPRESSIVE STRENGTH f'm OR 2,000 PSI AT 28 DAYS, WHICHEVER IS GREATER.
   C. MIX PROPORTIONS SHALL CONFORM TO ASTM C-476.
   D. AGGREGATES SHALL CONFORM TO ASTM C-404.
   E. USE COARSE GROUT IN GROUT SPACES 2 INCHES OR MORE IN WIDTH AND IN CELLS TO BE GROUTED SOLID.
6. SEE "REINFORCING STEEL" SECTION OF GENERAL NOTES FOR ASTM SPECIFICATIONS OF REINFORCING STEEL.
7. MINIMUM LAP OF REINFORCING STEEL IN 12" CMU OR GREATER WALLS, OR #6 OR GREATER BARS SHALL BE 72 BAR DIAMETERS. BALANCE OF LAPS SHALL BE 48 BAR DIAMETERS OR A MINIMUM OF 2'-0".
8. MINIMUM GROUTING: SOLID GROUT ALL CELLS UNLESS NOTED OTHERWISE.
9. VERTICAL EXPANSION JOINTS SHALL BE PROVIDED AT 40'-0" o/c MAXIMUM. EXPANSION JOINT MATERIALS SHALL BE PER ASTM C90, D994, OR D1056 CLASS 2A1.
10. SPECIAL INSPECTION OF WORK IS REQUIRED FOR ALL MASONRY STRUCTURES PER TMS 402/ACI 530/ASCE 5 LEVEL B QUALITY ASSURANCE, UNLESS NOTED OTHERWISE ON THE DRAWINGS.
11. ALL BOLTS SHALL BE GROUTED IN PLACE WITH AT LEAST 1 INCH OF GROUT BETWEEN THE BOLT AND THE MASONRY.
12. THE CLEAR DISTANCE BETWEEN PARALLEL BARS SHALL NOT BE LESS THAN THE NOMINAL DIAMETER OF THE BARS, NOR LESS THAN 1 IN. (25.4mm).
13. IN COLUMNS AND PILASTERS, THE CLEAR DISTANCE BETWEEN VERTICAL BARS SHALL NOT BE LESS THAN ONE AND ONE-HALF TIMES THE NOMINAL BAR DIAMETER, NOR LESS THAN 1½ IN. (38.1mm).
14. THE CLEAR DISTANCE LIMITATIONS BETWEEN BARS REQUIRED IN SECTIONS 1.13.3.1 AND 1.13.3.2 SHALL ALSO APPLY TO THE CLEAR DISTANCE BETWEEN A CONTACT LAP SPLICE AND ADJACENT SPLICES OR BARS.
15. GROUPS OF PARALLEL REINFORCING BARS BUNDLED IN CONTACT TO ACT AS A UNIT SHALL BE LIMITED TO TWO IN ANY ONE BUNDLE. INDIVIDUAL BARS IN A BUNDLE CUT OFF WITHIN THE SPAN OF A MEMBER SHALL TERMINATE AT POINTS AT LEAST 40 BAR DIAMETER APART.
16. REINFORCEMENT EMBEDDED IN GROUT SHALL HAVE A THICKNESS OF GROUT BETWEEN THE REINFORCEMENT AND MASONRY UNITS NOT LESS THAN ¼ IN. (6.4mm) FOR FINE GROUT OR ½ IN. (12.7mm) FOR COARSE GROUT.
17. REINFORCING BARS SHALL HAVE A MASONRY COVER NOT LESS THAN THE FOLLOWING:
   A. MASONRY FACE EXPOSED TO EARTH OR WEATHER: 2 IN. (50.8mm) FOR BARS LARGER THAN NO.5 (M #16); 1½ IN. (38.1mm) FOR NO.5 (M #16) BARS OR SMALLER.
   B. MASONRY NOT EXPOSED TO EARTH OR WEATHER: 1½ IN. (38.1mm).
15. LONGITUDINAL WIRES OF JOINT REINFORCEMENT SHALL BE FULLY EMBEDDED IN MORTAR OR GROUT WITH A MINIMUM COVER OF ⅝ IN. (15.9mm) WHEN EXPOSED TO EARTH OR WEATHER AND ½ IN. (12.7mm) WHEN NOT EXPOSED TO EARTH OR WEATHER. JOINT REINFORCEMENT SHALL BE STAINLESS STEEL OR PROTECTED FROM CORROSION BY HOT-DIPPED GALVANIZED COATING OR EPOXY COATING WHEN USED IN MASONRY EXPOSED TO EARTH OR WEATHER AND IN INTERIOR WALLS EXPOSED TO A MEAN RELATIVE HUMIDITY EXCEEDING 75 PERCENT. ALL OTHER JOINT REINFORCEMENT SHALL BE MILL GALVANIZED, HOT-DIP GALVANIZED, OR STAINLESS STEEL.
16. WALL TIES, SHEET-METAL ANCHORS, STEEL PLATES AND BARS, AND INSERTS EXPOSED TO EARTH OR WEATHER, OR EXPOSED TO A MEAN RELATIVE HUMIDITY EXCEEDING 75 PERCENT SHALL BE STAINLESS STEEL OR PROTECTED FROM CORROSION BY HOT-DIP GALVANIZED COATING OR EPOXY COATING. WALL TIES, ANCHORS, AND INSERTS SHALL BE MILL GALVANIZED, HOT-DIP GALVANIZED, OR STAINLESS STEEL FOR ALL OTHER CASES. ANCHOR BOLTS, STEEL PLATES, AND BARS NOT EXPOSED TO EARTH, WEATHER, NOR EXPOSED TO A MEAN RELATIVE HUMIDITY EXCEEDING 75 PERCENT, NEED NOT BE COATED.
17. REINFORCEMENT SHALL BE SUPPORTED AND FASTENED TOGETHER TO PREVENT DISPLACEMENTS BEYOND THE TOLERANCES ALLOWED BY SECTION 3.4 OF ACI 530.1 PRIOR TO GROUTING.
18. GROUT LIFTS SHALL NOT EXCEED 12.67 FEET WHEN THE MASONRY HAS CURED FOR 4 HOURS, THE GROUT SLUMP IS MAINTAINED BETWEEN 10 AND 11 INCHES AND NO INTERMEDIATE REINFORCED BOND BEAMS ARE PLACED BETWEEN THE TOP AND THE BOTTOM OF THE POUR HEIGHT. OTHERWISE, PLACE GROUT IN LIFTS NOT EXCEEDING 5 FEET. (SECTION 3.5 OF ACI 530.1)
19. PIPES AND CONDUITS EMBEDDED IN MASONRY SHALL NOTE REDUCE THE REQUIRED STRENGTH. (SECTION 1.16.2 OF ACI 530)
20. SUPPORT AND FASTEN REINFORCEMENT TOGETHER TO PREVENT DISPLACEMENT BEYOND THE TOLERANCES ALLOWED BY CONSTRUCTION LOADS OR BY PLACEMENT OF GROUT OR MORTAR.
21. COMPLETELY EMBED REINFORCING BARS IN GROUT IN ACCORDANCE WITH ARTICLE 3.5 ACI 350.
22. MAINTAIN CLEAR DISTANCE BETWEEN REINFORCING BARS AND ANY FACE OF MASONRY UNIT OR FORMED SURFACE, BUT NOT LESS THAN ¼ IN. (6.4mm) FOR FINE GROUT OR ½ IN. (12.7mm) FOR COARSE GROUT.
23. SPLICE ONLY WHERE INDICATED ON THE PROJECT DRAWINGS, UNLESS OTHERWISE ACCEPTABLE. WHEN SPLICING BY WELDING, PROVIDE WELDS IN CONFORMANCE WITH THE PROVISIONS OF AWS D 1.4.
24. UNLESS ACCEPTED BY THE ARCHITECT/ENGINEER, DO NOT BEND REINFORCEMENT AFTER IT IS EMBEDDED IN GROUT OR MORTAR.
25. NONCONTACT LAP SPLICES – POSITION BARS SPLICED BY NONCONTACT LAP SPLICE NO FARTHER APART TRANSVERSELY THAN ONE-FIFTH THE SPECIFIED LENGTH OF LAP NOR MORE THAN 8 IN. (203mm).
26. TOLERANCES FOR THE PLACEMENT OF REINFORCING BARS IN WALLS AND FLEXURAL ELEMENTS SHALL BE ± ½ IN. (12.7mm) WHEN THE DISTANCE FROM THE CENTERLINE OF REINFORCING BARS TO THE OPPOSITE FACE OF MASONRY, d, IS EQUAL TO 8 IN. (203mm) OR LESS, ± 1 IN. (25.4mm) FOR d EQUAL TO 24 IN. (610mm) OR LESS BUT GREATER THAN 8 IN. (203mm), AND ± 1¼ IN. (31.8mm) FOR d GREATER THAN 24 IN. (610mm).
27. PLACE VERTICAL BARS WITHIN 2 IN. (50.8mm) OF THE REQUIRED LOCATION ALONG THE LENGTH OF THE WALL.
28. IF IT IS NECESSARY TO MOVE BARS MORE THAN ONE BAR DIAMETER OR A DISTANCE EXCEEDING THE TOLERANCE STATED ABOVE TO AVOID INTERFERENCE WITH OTHER REINFORCING STEEL, CONDUITS, OR EMBEDDED ITEMS, NOTIFY THE ARCHITECT/ENGINEER FOR ACCEPTANCE OF THE RESULTING ARRANGEMENT OF BARS.
29. FOUNDATION DOWELS THAT INTERFERE WITH UNIT WEBS ARE PERMITTED TO BE BENT TO A MAXIMUM OF 1 IN. (25mm) HORIZONTALLY FOR EVERY 6 IN. (152mm) OF VERTICAL HEIGHT.
30. EMBED HEADED AND BENT-BAR ANCHOR BOLTS LARGER THAN ¼ IN. (6.4mm) DIAMETER IN GROUT THAT IS PLACED IN ACCORDANCE WITH ARTICLE 3.5 A AND ARTICLE 3.5 B ACI 350. ANCHOR BOLTS OF ¼ IN. (6.4mm) DIAMETER OR LESS ARE PERMITTED TO BE PLACED IN GROUT OR MORTAR BED JOINTS THAT HAVE A SPECIFIED THICKNESS OF AT LEAST ½ IN. (12.7mm) THICKNESS.
31. MAINTAIN CLEAR DISTANCE BETWEEN ANCHOR BOLTS AND ANY FACE OF MASONRY UNIT OR FORMED SURFACE OF AT LEAST ¼ IN. (6.4mm) WHEN USING FINE GROUT, AND OF AT LEAST ½ IN. (12.7mm) WHEN USING COARSE GROUT.
32. PLACE ANCHOR BOLTS WITH A CLEAR DISTANCE BETWEEN PARALLEL ANCHOR BOLTS NOT LESS THAN THE NOMINAL DIAMETER OF THE ANCHOR BOLT, NOR LESS THAN 1 IN. (25.4mm).
33. OWNER WILL ENGAGE A QUALIFIED INDEPENDENT TESTING AGENCY TO PERFORM PRECONSTRUCTION TESTING INDICATED BELOW. RETESTING OF MATERIALS THAT FAIL TO COMPLY WITH SPECIFIED REQUIREMENTS SHALL BE DONE AT CONTRACTOR'S EXPENSE.
   33.1. CONCRETE MASONRY UNIT TEST: FOR EACH TYPE OF UNIT REQUIRED, ACCORDING TO ASTM C 140 FOR COMPRESSIVE STRENGTH.
   33.2. MORTAR TEST (PROPERTY SPECIFICATION): FOR EACH MIX REQUIRED, ACCORDING TO ASTM C 109/C 109M FOR COMPRESSIVE STRENGTH[, ASTM C 1506 FOR WATER RETENTION, AND ASTM C 91 FOR AIR CONTENT].
   33.3. MORTAR TEST (PROPERTY SPECIFICATION): FOR EACH MIX REQUIRED, ACCORDING TO ASTM C 780 FOR COMPRESSIVE STRENGTH.
   33.4. GROUT TEST (COMPRESSIVE STRENGTH): FOR EACH MIX REQUIRED, ACCORDING TO ASTM C 1019.

MICROLLAM LAMINATED VENEER LUMBER (LVL):

1. MICROLAMM LAMINATED VENEER LUMBER (LVL) BEAMS, RIM JOISTS AND STUDS SHALL BE AS MANUFACTURED BY WEYERHAEUSER. DESIGN AND INSTALLATION SHALL BE IN ORDINANCE WITH ICC-ES ESR-1387, LARR 25202.
2. MICROLAMM LAMINATED VENEER LUMBER (LVL) BEAMS AND RIM JOISTS SHALL BE GRADE 1.8E AND PROVIDE STRESS VALUES THAT MEET OR EXCEED THE FOLLOW: (ENGINEER TO VERIFY)

BENDING STRESS (EDGE LOADING), FB	2445 PSI
SHEAR STRESS (EDGE LOADING), FV	285 PSI
COMPREHENSIVE STRESS PERPENDICULAR TO THE GRAIN (EDGE LOAD), FC	750 PSI
BENDING STRESS (PLANK LOADING), FB	2890 PSI
SHEAR STRESS (PLANK LOADING), FV	190 PSI
COMPREHENSIVE STRESS PERPENDICULAR TO THE GRAIN (PLANK LOADING), FC	480 PSI
TENSILE STRESS, FT	1450 PSI
COMPREHENSIVE STRESS PARALLEL TO THE GRAIN, FC	2375 PSI
MODULUS OF ELASTICITY, E	1800 PSI

3. PRODUCT OF OTHER MANUFACTURERS WITH EQUAL OR GREATER CAPACITY MAY BE USED.

REVISIONS

NO.	REVISION	DATE
1	PC CORRECTIONS	09/06/17

RGSE inc. **Structural**
2720 Cochran St. Suite 8B
Simi Valley, CA 93065
P: 805.522.3379
F: 805.378.7137
info@rgseinc.com
www.rgseinc.com

NEW CONSTRUCTION & RENOVATIONS
STONEBRIDGE COMMUNITY CHURCH
4832 COCHRAN STREET
SIMI VALLEY, CA. 93063

SHEET TITLE :
GENERAL NOTES

JOB NO: 16307
DRAWN: raulg@rgseinc.com
ENGINEER: sokheanc@rgseinc.com
DATE: 02/14/17
STAMP:
RAMON GARCIA
No. 4595
Exp. 6/30/2017
FOR PLAN CHECK ONLY

S0.1

WOOD SHEAR WALL NOTES:

1. WHERE ALLOWABLE SHEAR VALUES EXCEED 350 POUNDS PER FOOT, FOUNDATION SILL PLATES AND ALL FRAMING MEMBERS RECEIVING EDGE NAILING FROM ABUTTING PANELS SHALL NOT BE LESS THAN A SINGLE 3-INCH (76mm) NOMINAL MEMBER, OR TWO 2-INCH NOMINAL MEMBERS FASTENED TOGETHER WITH 16d NAILS WITH SPACING EQUAL TO E.N. TO TRANSFER TO TRANSFER THE DESIGN SHEAR VALUE BETWEEN FRAMING MEMBERS. WOOD STRUCTURAL PANEL JOINT AND SILL PLATE NAILING SHALL BE STAGGERED IN ALL CASES.
2. FRAMING AT ADJOINING PANEL EDGES SHALL BE 3 INCHES NOMINAL OR WIDER, AND NAILS SHALL BE STAGGERED WHERE BOTH OF THE FOLLOWING CONDITIONS ARE MET: (1) 10d (3"x0.148") NAILS HAVING PENETRATION INTO FRAMING OF MORE THAN 1½ INCHES AND (2) NAILS ARE SPACED 3 INCHES ON CENTER.
3. REQUIRE MINIMUM ½" EDGE DISTANCE FOR NAILING AT THE 3X BOUNDARY AND PANEL EDGE MEMBERS OF THESE SHEAR WALLS.
4. FIELD NAIL SHALL BE 8d @ 12"O.C.
5. ½" STRUCTURAL 1 PLYWOOD SHALL HAVE 5 PLY LAMINATIONS SI (24/16).
6. ALL BOLTS HOLES SHALL BE 1/16" (MAX.) OVER SIZED AT THE CONNECTION OF THE HOLD DOWN POSTS. (INSPECTOR TO VERIFY)
7. HOLD DOWN CONNECTION BOLTS AND NUTS SHALL BE TORQUED ⅓ TURN BEYOND FINGER TIGHT OR AS REQUIRED BY THE MANUF. (INSPECTOR SHALL VERIFY BY RANDOM INSPECTION PRIOR TO COVERING THE WALLS).
8. APPROVED PLATE WASHERS SHALL BE PROVIDED FOR ALL PLYWOOD SHEAR WALL SILL PLATE ANCHOR BOLTS, PER TABLE "A" BELOW. IN 2X6 WALLS, ANCHOR BOLTS SHALL BE PLACED, OR PLATE WASHER WILL BE OVERSIZED SO THAT THE PLATE WASHER IS ½" MAXIMUM CLEAR TO EDGE OF SILL PLATE WITH SHEATHING. IN 2X6 WALLS WITH SHEATHING ON BOTH SIDES, STAGGER THE ANCHOR BOLTS SO THAT THE PLATE WASHER IS ½" MAXIMUM CLEAR TO EDGE OF SILL PLATE WITH SHEATHING
9. APPROVED PLATE WASHERS, IN-LIEU OF CUT WASHERS, SHALL BE PROVIDED FOR HOLD DOWN CONNECTORS BOLTS AT SHEAR WALL WOOD FLANGES, PER TABLE "A" BELOW.
10. SIMPSON LTP4 MAY BE USED IN-LIEU OF SIMPSON A35 AND A35F.
11. A.B. MIN. IS MIN. EMBED. INTO FOOTING.
12. WHERE PANELS ARE APPLIED ON BOTH FACES OF A WALL AND NAIL SPACING IS LESS THAN 6 INCHES (152mm) ON CENTER ON EITHER SIDE, PANEL JOINTS SHALL BE OFFSET TO FALL ON DIFFERENT FRAMING MEMBERS OR FRAMING SHALL BE 3-INCH (76mm) NOMINAL OR THICKER AND NAILS ON EACH SIDE SHALL BE STAGGERED.
13. WHERE INDICATED ON PLAN, 'SWO' (SHEAR WALL OPENING), BLOCK & STRAP CORNERS OF OPENINGS PER (9 / S0.4)
14. INSTALL HOLDOWNS PER MANUF. RECOMM.
15. SPECIAL INSPECTION AT HOLDOWN INSTALLATION WHERE REQUIRED BY BUILDING OFFICIAL.
16. ALL HOLDOWNS ANCHOR BOLTS SHALL BE TIED IN PLACE PRIOR TO POURING CONCRETE.
17. ALL PLYWOOD SHEATHING SHALL UTILIZE COMMON NAILS.
18. FOR WALL LENGTH AND LOCATION OF HOLDOWNS, FRAMING TOLERANCE IS ± 5% OF THE SPECIFIED SHEARWALL OR PIER LENGTH, WHICHEVER IS LESS.

TABLE "A"

MIN. SIZE FOR SQUARE PLATE WASHERS

BOLT SIZE	PLATE SIZE
5/8"	¼" X 3" X 3"
¾"	5/16" X 3" X 3"
⅞"	5/16" X 3" X 3"
1"	⅜" X 3½" X 3½"

1 MANUFACTURED RESIDENTIAL JOISTS:

1. MANUFACTURED JOISTS SHALL BE iLEVEL BY WEYERHAEUSER.
2. SUBSTITUTIONS SHALL BE EQUIVALENT AND SHALL BE APPROVED BY THE ARCHITECT AND THE ENGINEER, PRIOR TO FABRICATION.
3. WD I-JOISTS
   - ICC-ES ESR-2994
   - LARR 25883

ABBREVIATIONS

AB	ANCHOR BOLT	FH	FULL HEIGHT	R&R	REMOVE & REPLACE
ABV	ABOVE	FN	FIELD NAILING	SCHED	SCHEDULE
ADDL	ADDITIONAL	FL	FLOOR	SF	SQUARE FOOT
ADHES	ADHESIVE	FS	FAR SIDE	SHT	SHEET
ALT	ALTERNATE	FDN	FOUNDATION	SIM	SIMILAR
ARCH	ARCHITECT, ARCHITECTURAL	FOC	FACE OF CONCRETE	SN	SOLE ℙ NAILING
BTWN	BETWEEN	FOS	FACE OF STUD	SPEC	SPECIFICATION
BLW	BELOW	FT	FOOT, FEET	SQ	SQUARE
BLDG	BUILDING	FTG	FOOTING	STD	STANDARD
BLKG	BLOCKING	GA	GAGE	STL	STEEL
BM	BEAM	GALV	GALVANIZED	STRUCT	STRUCTURAL
BN	BOUNDARY NAILING	GND	GROUND	SYM	SYMMETRICAL
BOT	BOTTOM	GRD	GRADE	THK	THICK
BS	BOTH SIDES	GT	GIRDER TRUSS	THRD	THREADED
BSMT	BASEMENT	HT	HEIGHT	T&B	TOP & BOTTOM
CF	CUBIC FOOT	HORIZ	HORIZONTAL	TN	TOE NAIL
CJ	CONTROL JOINT, CEILING JOIST	HS	HIGH STRENGTH	TOF	TOP OF FOOTING
CLG	CEILING	INFO	INFORMATION	TOS	TOP OF STEEL
CLR	CLEAR	INT	INTERIOR	TL	TOP OF LEDGER
CMU	CONCRETE MASONRY UNIT	JT	JACK TRUSS	TOW	TOP OF WALL
CNTRSNK	COUNTERSINK/COUNTERSUNK	KP	KING POST	TRANSV	TRANSVERSE
COL	COLUMN	KSI	KIPS PER SQUARE INCH	TS	TUBE STEEL
CONC	CONCRETE	LBS	POUNDS	TYP	TYPICAL
CONN	CONNECTION	LG	LONG	UNO	UNLESS NOTED OTHERWISE
CONST	CONSTRUCTION	LOC'S	LOCATIONS	VERT	VERTICAL
CONT	CONTINUOUS	LONG	LONGITUDINAL	WF	WIDE FLANGE BEAM
CONTR	CONTRACTOR	LT WT	LIGHT WEIGHT	W/	WITH
CVR	COVER	MAX	MAXIMUM	W/O	WITHOUT
DIA	DIAMETER	MB	MACHINE BOLT	WT	WEIGHT
DIR	DIRECTION	MD	METAL DECK	WP	WORKING POINT
D.O.	DO OVER	MECH	MECHANICAL	WWF	WELDED WIRE FABRIC
DSA	DEPARTMENT OF STATE ARCHITECTS	MANUF	MANUFACTURER	WWO	WALL W/ OPENING AND/OR PERFORATED S.W.
DWG	DRAWING	MIN	MINIMUM		
(E)	EXISTING	MISC	MISCELLANEOUS		
EA	EACH	MTL	METAL		
EF	EACH FACE	(N)	NEW		
ELEC	ELECTRICAL	NS	NEAR SIDE, NELSON STUD		
EL	ELEVATION	NW	NORMAL WEIGHT		
EN	EDGE NAILING	OC	ON CENTER		
ENGR	ENGINEER	OH	OPPOSITE HAND		
ES	EDGE SCREW	OPP	OPPOSITE		
EXP JT	EXPANSION JOINT	PSF	POUNDS PER SQUARE FOOT		
EQ	EQUAL	PSI	POUNDS PER SQUARE INCH		
EXT	EXTERIOR	PT	PLATE TRUSS		
FF	FINISHED FLOOR	REINF	REINFORCEMENT		
FG	FINISHED GRADE	REQ	REQUIRE		

SYMBOLS

∠	ANGLE
@	AT
℄	CENTERLINE
ℙ	PLATE / PROPERTY LINE
#	POUNDS
ø	DIAMETER
⊥	PERPENDICULAR
//	PARALLEL

REVISIONS

NO.	REVISION	DATE
1	PC CORRECTIONS	09/06/17

RGSE inc. Structural
2720 Cochran St. Suite 8B
Simi Valley, CA 93065
P : 805.522.3379
F : 805.378.7137
info@rgseinc.com
www.rgseinc.com

NEW CONSTRUCTION & RENOVATIONS
STONEBRIDGE COMMUNITY CHURCH
4832 COCHRAN STREET
SIMI VALLEY, CA. 93063

SHEET TITLE :
GENERAL NOTES

JOB NO: 16307
DRAWN: raulg@rgseinc.com
ENGINEER: sokheanc@rgseinc.com
DATE: 02/14/17
STAMP:

REGISTERED PROFESSIONAL ENGINEER
RAMON GARCIA
No. 4595
Exp. 6/30/2017
STRUCTURAL
STATE OF CALIFORNIA
COPYRIGHT

S0.2

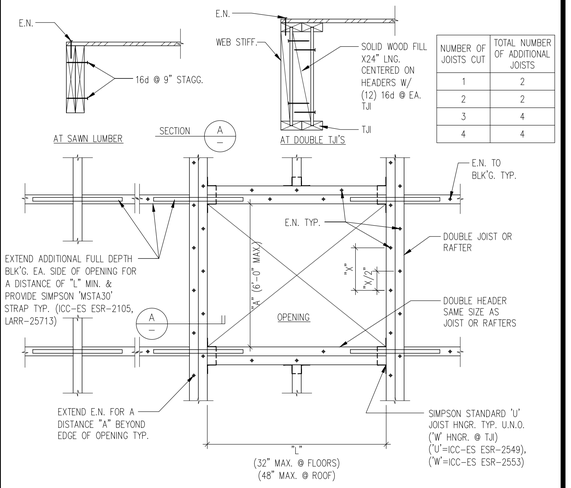

NUMBER OF JOISTS CUT	TOTAL NUMBER OF ADDITIONAL JOISTS
1	2
2	2
3	4
4	4

TYP. FLR. OR ROOF OPENING PLAN — SCALE: 1"=1'-0" — 10

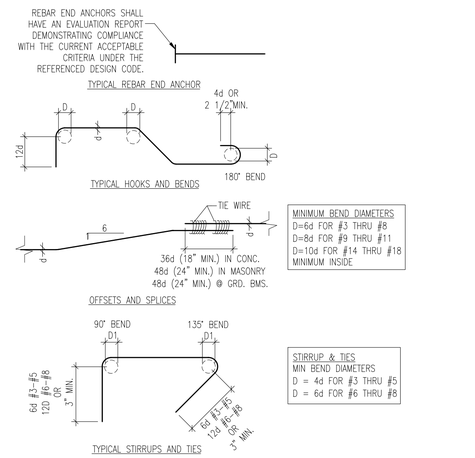

MINIMUM BEND DIAMETERS
D=6d FOR #3 THRU #8
D=8d FOR #9 THRU #11
D=10d FOR #14 THRU #18
MINIMUM INSIDE

STIRRUP & TIES
MIN BEND DIAMETERS
D = 4d FOR #3 THRU #5
D = 6d FOR #6 THRU #8

REINFORCING DETAIL — SCALE: 1"=1'-0" — 7

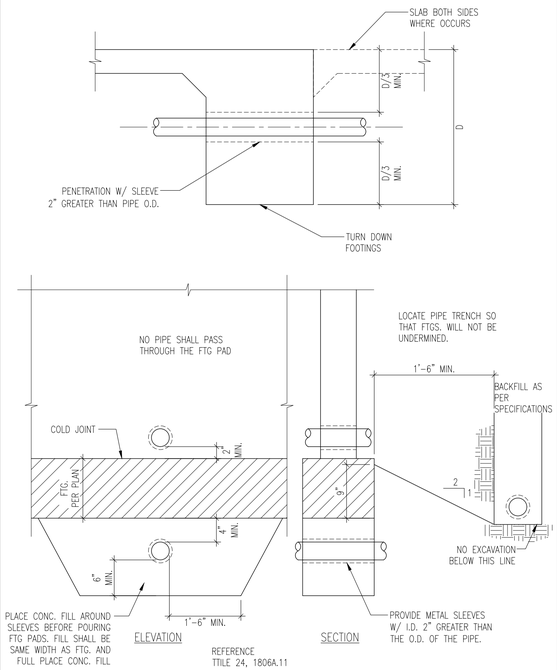

TYP. PIPE TRENCH / FTG DETAIL — SCALE: 1"=1'-0" — 5

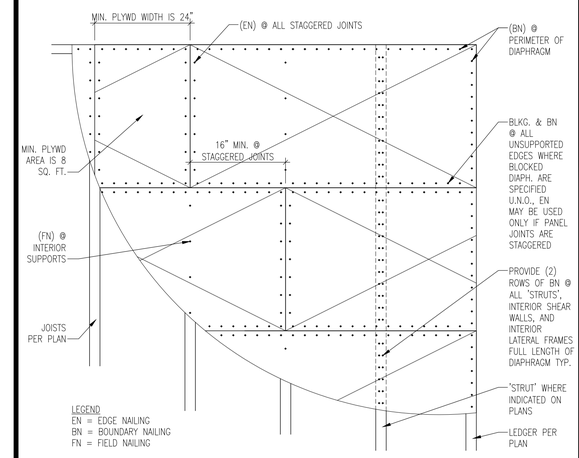

FLOOR & ROOF SHTG. DETAIL — SCALE: 1"=1'-0" — 1

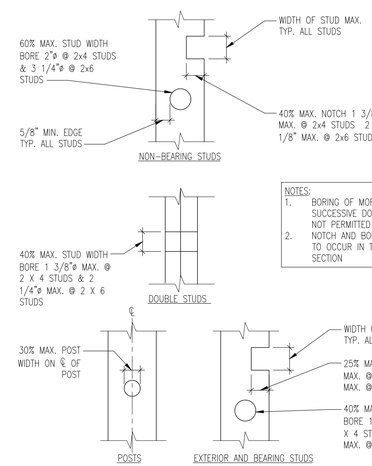

NOTES:
1. BORING OF MORE THAN TWO SUCCESSIVE DOUBLE STUDS IS NOT PERMITTED
2. NOTCH AND BORING IS NOT TO OCCUR IN THE SAME STUD SECTION

STUD NOTCHING — SCALE: 1"=1'-0" — 11

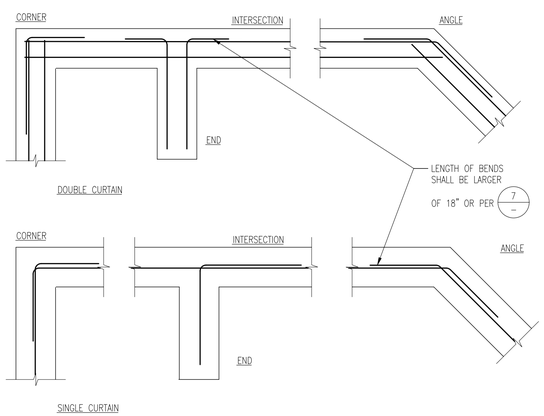

REINF. AT INTERSECTIONS — SCALE: 1"=1'-0" — 8

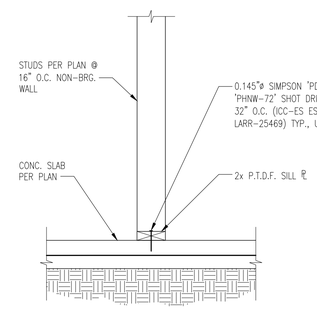

PARTITION WALL — SCALE: 1"=1'-0" — 2

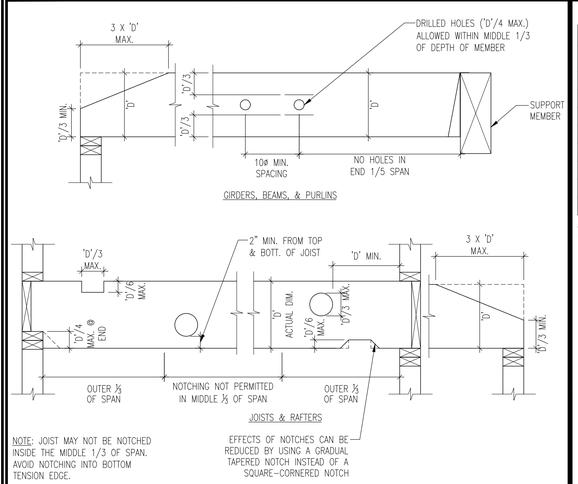

ENGINEERED & SOLID LUMBER ALLOWABLE NOTCHING — SCALE: 1"=1'-0" — 12

CHEMICAL ANCHOR MIN. DISTANCES

ROD DIAMETER	DRILL BIT DIAMETER	MIN. EMBEDMENT	MIN. EDGE DISTANCE	MIN. SPACING
X 25.4 FOR mm				
⅜" ø	½"	1¾"	2⅝"	7"
½" ø	⅝"	2⅛"	3 1/16"	6½"
⅝" ø	¾"	2½"	3¼"	10"
¾" ø	⅞"	3⅜"	5 9/16"	1 3½"
⅞" ø	1"	3⅞"	5 13/16"	1 5½"
1" ø	1⅛"	4½"	6¾"	18"
1¼" ø	1⅜"	5⅝"	8 7/16"	2 2½"

NOTES:
1. BOLTS SHALL BE PLACED NO CLOSER THAN (12) BOLT DIA. APART OR (6) BOLT DIA. FROM END OF CONCRETE OR MASONRY.
2. INCREASE EMBEDMENT BY 2" FOR A.B.'s IN THE TOP OF WALLS, COLUMNS, AND PILASTERS.
3. DOUBLE THE EMBED FOR ANCHOR BOLTS PLACED VERTICAL INTO FOUNDATIONS

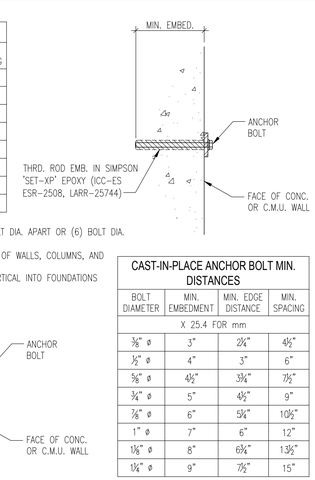

CAST-IN-PLACE ANCHOR BOLT MIN. DISTANCES

BOLT DIAMETER	MIN. EMBEDMENT	MIN. EDGE DISTANCE	MIN. SPACING
X 25.4 FOR mm			
⅜" ø	3"	2¼"	4½"
½" ø	4"	3"	6"
⅝" ø	4½"	3¾"	7½"
¾" ø	5"	4½"	9"
⅞" ø	6"	5¼"	10½"
1" ø	7"	6"	12"
1⅛" ø	8"	6¾"	13½"
1¼" ø	9"	7½"	15"

ANCHOR BOLTS — SCALE: 1"=1'-0" — 9

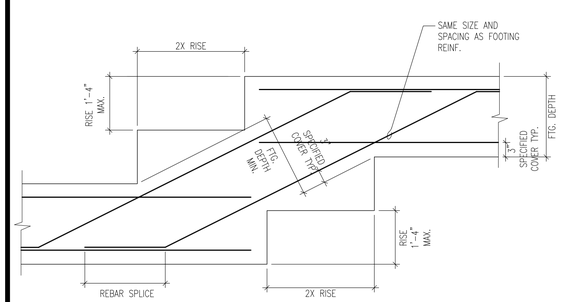

SILL PLATE CONN. TO CONCRETE — SCALE: 1"=1'-0" — 6

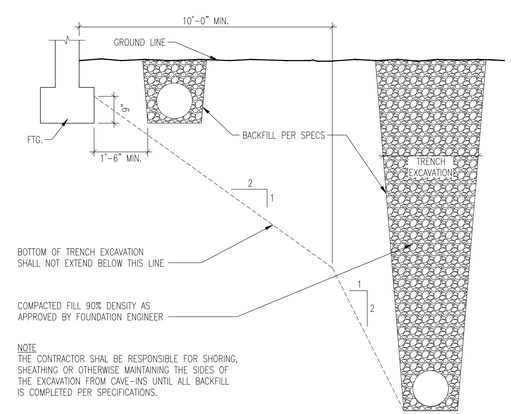

NOTE
THE CONTRACTOR SHAL BE RESPONSIBLE FOR SHORING, SHEATHING OR OTHERWISE MAINTAINING THE SIDES OF THE EXCAVATION FROM CAVE-INS UNTIL ALL BACKFILL IS COMPLETED PER SPECIFICATIONS.

TRENCHING DETAIL — SCALE: 1"=1'-0" — 3

REVISIONS

NO.	REVISION	DATE
1	PC CORRECTIONS	09/06/17

RGSE inc. Structural
2720 Cochran St. Suite 8B
Simi Valley, CA 93065
P : 805.522.3379
F : 805.378.7137
info@rgseinc.com
www.rgseinc.com

NEW CONSTRUCTION & RENOVATIONS
STONEBRIDGE COMMUNITY CHURCH
4832 COCHRAN STREET
SIMI VALLEY, CA. 93063

SHEET TITLE :
TYPICAL DETAILS

JOB NO: 16307
DRAWN: raulg@rgseinc.com
ENGINEER: sokheanc@rgseinc.com
DATE: 02/14/17
STAMP: REGISTERED PROFESSIONAL ENGINEER RAMON GARCIA No. 4599 Exp. 6/30/2017 STRUCTURAL STATE OF CALIFORNIA — COPYRIGHT

S0.3

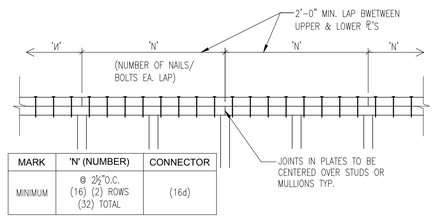

MARK	'N' (NUMBER)	CONNECTOR
MINIMUM	@ 2½"O.C. (16) (2) ROWS (32) TOTAL	(16d)

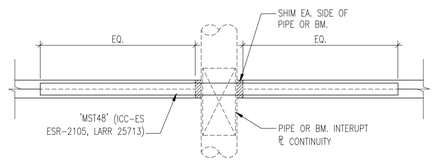

PIPES GROUPS PLAN

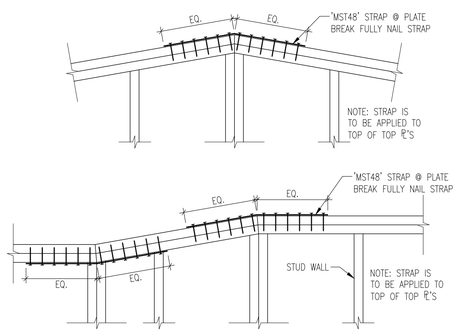

TOP PLATE SPLICE

SCALE: 1"=1'-0" | 11

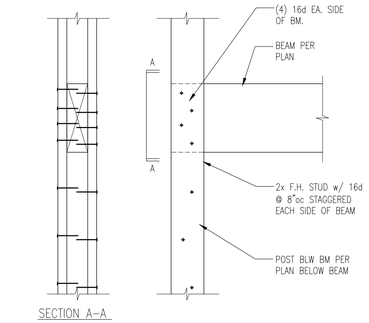

SECTION A-A

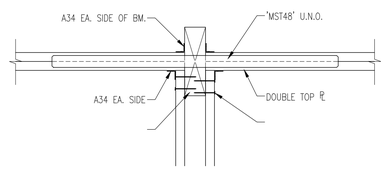

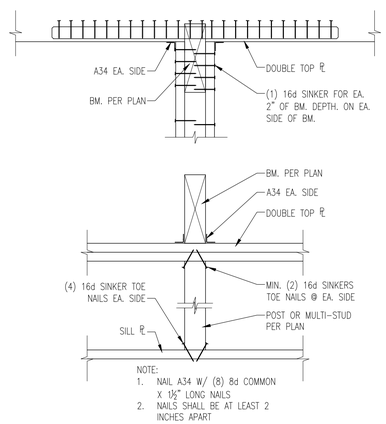

NOTE:
1. NAIL A34 W/ (8) 8d COMMON X 1½" LONG NAILS
2. NAILS SHALL BE AT LEAST 2 INCHES APART

BEAM POCKET

SCALE: 1"=1'-0" | 8

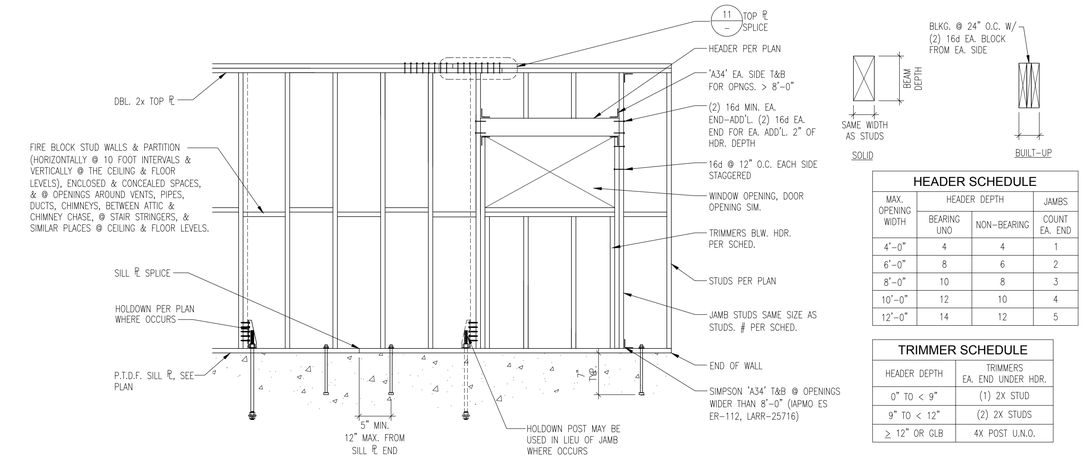

HEADER SCHEDULE			
MAX. OPENING WIDTH	HEADER DEPTH		JAMBS
	BEARING UNO	NON-BEARING	COUNT EA. END
4'-0"	4	4	1
6'-0"	8	6	2
8'-0"	10	8	3
10'-0"	12	10	4
12'-0"	14	12	5

TRIMMER SCHEDULE	
HEADER DEPTH	TRIMMERS EA. END UNDER HDR.
0" TO < 9"	(1) 2X STUD
9" TO < 12"	(2) 2X STUDS
≥ 12" OR GLB	4X POST U.N.O.

TYP. WOOD STUD WALL

SCALE: 1"=1'-0" | 1

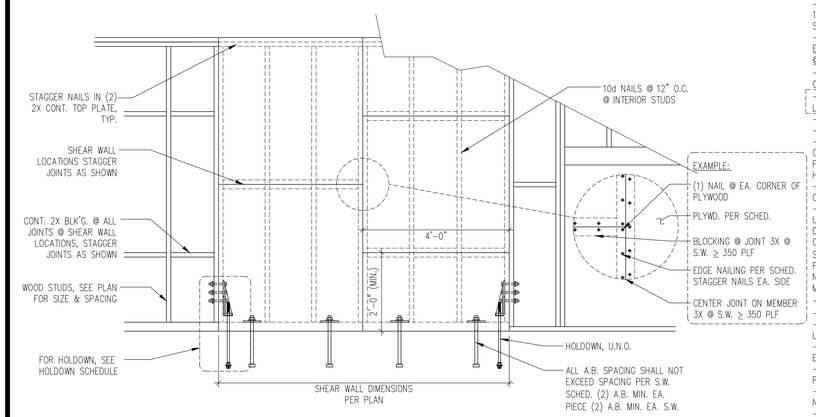

SHEARWALL NOTES:
-OSB SHALL BE 15/32" THICK & CONFORM TO U.S. PRODUCT STANDARD PS 1-95 C-D STRUCTURAL 1 OR U.S. PRODUCT STANDARD PS 1-95 APA STRUCTURAL 1 EXP. 1, WITH EXTERIOR GLUE. U.N.O.
-ALL NAILS SHALL BE COMMON WIRE NAILS
EDGE NAILING – SEE SHEARWALL SCHEDULE ON INTERMEDIATE NAILING – 10d @ 12"O.C.
-NAILS SHALL BE STAGGERED WHERE NAILS ARE SPACED 3" INCHES OR LESS ON CENTER AT PLYWOOD JOINTS.
-INDIVIDUAL PIECES OF PLYWOOD SHALL BE NOT LESS THAN 2'-0"X4'-0" IN LEAST DIMENSION NOR 8 SQ. FT. IN AREA.
-PRE-BORE HOLES FOR NAILS WHERE MEMBERS TEND TO SPLIT.
-RETIGHTEN SILL BOLTS NUTS BEFORE CLOSING IN.
-PROVIDE FURRING OR BACKING OF THICKNESS AS REQUIRED TO MAINTAIN A COMMON WALL PLANE ALL WOOD STUD WALL SURFACE WHICH ARE ONLY PARTIALLY SHEATHED WITH STRUCTURAL PLYWOOD. COORDINATE AND ADJUST HEAD, JAMB AND SILL AS REQUIRED FOR PROPER OVERALL WALL THICKNESS.
-PLYWOOD SHEETS MAY BE APPLIED VERTICALLY OR HORIZONTALLY AT CONTRACTOR'S OPTION. PLYWOOD JOINTS SHALL BE STAGGERED.
-MACHINE APPLIED NAILING:
USE OF MACHINE NAILING IS SUBJECT TO A SATISFACTORY JOBSITE DEMONSTRATION FOR EACH PROJECT AND THE APPROVAL BY THE ARCHITECT OR STRUCTURAL ENGINEER. THE APPROVAL IS SUBJECT TO CONTINUED SATISFACTORY PERFORMANCE. MACHINE NAILING WILL NOT BE APPROVED IN 5/16" PLYWOOD, IF FLATHEADS PENTRATE THE OUTER PLY MORE THAN WOULD BE NORMAL FOR A HAMMER OR IF MINIMUM ALLOWABLE EDGE DISTANCES ARE NOT MAINTAINED, THE PERFORMANCE WILL BE DEEMED UNSATISFACTORY.
-ALL NAILING TO BE ½" MIN. TO EDGE OF SUPPORT AND SHEET.
-PROVIDE ⅛" GAP BETWEEN OSB SHEETS.
-SHEATH ENTIRE WALL INCLUDING ABOVE AND BELOW OPENING TO AVOID LETTING IN OF OSB SHEATHING WITH SAME NAILING AS SHOWN IN SCHEDULE.
-SHEAR WALLS MORE THAN ONE VERTICAL PANEL IN HEIGHT SHALL HAVE EITHER VERTICAL OR HORIZONTAL STAGGERED SPICED JOINTS.
-WHERE PANEL SHEAR CAPACITY > 350#, NAILS AT PANEL JOINTS AND SILL PLATES SHALL BE STAGGERED.
-ALL WOOD POSTS AND NAILER TO STEEL COLUMNS SHALL RECEIVE EDGE NAILING.
-MINIMUM LAG SCREW PENETRATION SHALL BE 8d.

SHEAR WALL SHTG. DETAIL

SCALE: 1"=1'-0" | 2

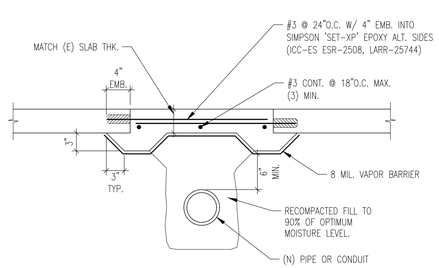

TRENCHING REPAIR IN (E) SLAB

SCALE: 1"=1'-0" | 12

NOTES:
1. B.N. AROUND OPENING TYP. SEE SHEAR WALL SCHED.
2. IF SHTG. IS ON OPPOSITE SIDE OF STRAPS, ADD E.N. ALL BLKG.

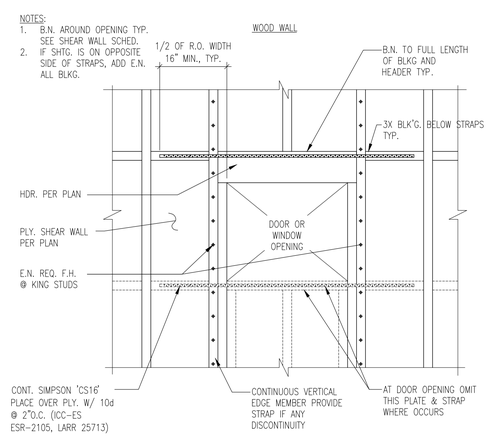

TYP. FRAMING AT S.W. OPENING

SCALE: 1"=1'-0" | 9

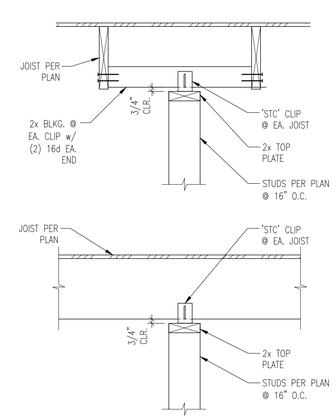

PARTITION WALL BRACING

SCALE: 1"=1'-0" | 6

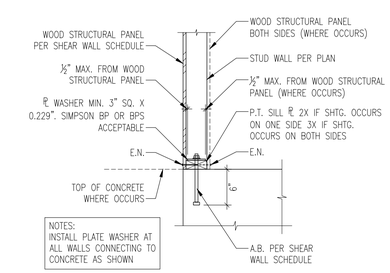

NOTES:
INSTALL PLATE WASHER AT ALL WALLS CONNECTING TO CONCRETE AS SHOWN

SILL PLATE CONN. TO CONCRETE

SCALE: 1"=1'-0" | 3

REVISIONS		
NO.	REVISION	DATE
1	PC CORRECTIONS	09/06/17

RGSE inc. Structural
2720 Cochran St. Suite 8B
Simi Valley, CA 93065
P : 805.522.3379
F : 805.378.7137
info@rgseinc.com
www.rgseinc.com

NEW CONSTRUCTION & RENOVATIONS
STONEBRIDGE COMMUNITY CHURCH
4832 COCHRAN STREET
SIMI VALLEY, CA. 93063

SHEET TITLE :
TYPICAL DETAILS

JOB NO: 16307
DRAWN: raulg@rgseinc.com
ENGINEER: sokheanc@rgseinc.com
DATE: 02/14/17
STAMP:

S0.4

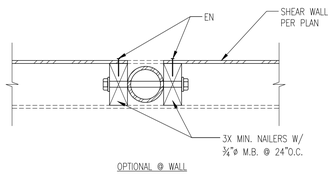

OPTIONAL @ WALL

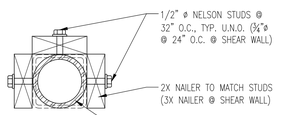

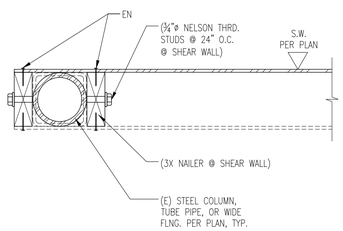

COLUMN NAILER

SCALE: 1"=1'-0" | 11

ANCHOR BOLT SCHEDULE				
DIAMETER (inch.)	MIN. de(inch.)	EDGE DIST. 'F'	MIN. END DIST.(inch.)	ALLOW. LOAD(lb.)
⅝"	12½"	5"	18"	5645
⅞"	14"	8"	18"	7040
1"	18"	16"	24"	12240
NOTE: VALUES BASED ON ACI 318-11 APPENDIX D. USE SIMPSON SET-XP EPOXY CONTINUOUS SPECIAL INSPECTION REQUIRED (ICC-ES ESR 2508, LARR 25744).				

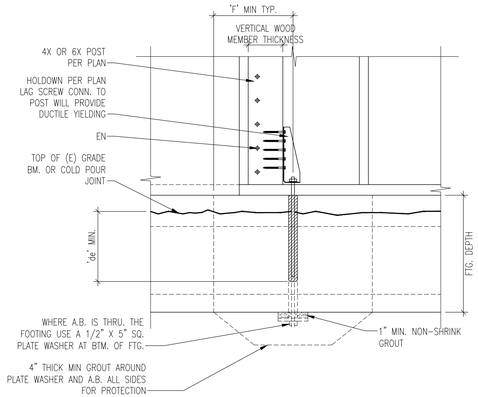

1. FOR HOLDOWNS, PER ASTM TEST STANDARDS, ANCHOR BOLT NUT SHOULD BE FINGER-TIGHT PLUS ⅓ TO ½ TURN WITH A HAND WRENCH, WITH CONSIDERATION GIVEN TO POSSIBLE FUTURE WOOD SHRINKAGE. CARE SHOULD BE TAKEN TO NOT OVER-TORQUE THE NUT. IMPACT WRENCHES SHOULD NOT BE USED.
2. TENSION VALUES ARE VALID FOR HOLDOWNS FLUSH OR RAISED OFF SILL PLATE.
3. NOTED HDU14 ALLOWABLE LOADS ARE BASED ON A 5½" WIDE POST (6X6 MIN.) ALL OTHER LOADS ARE BASED ON 3½" WIDE POST MINIMUM.
4. REQUIRES HEAVY HEX ANCHOR NUT TO ACHIEVE TABULATED LOADS (SUPPLIED WITH HOLDOWN).

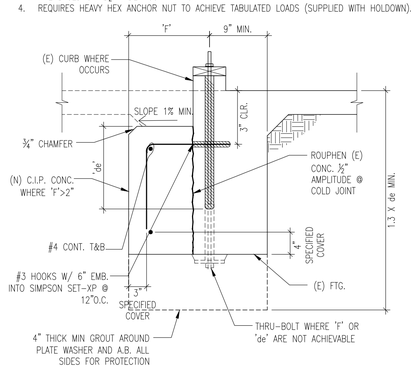

HOLDOWN DETAIL

SCALE: 1"=1'-0" | 5

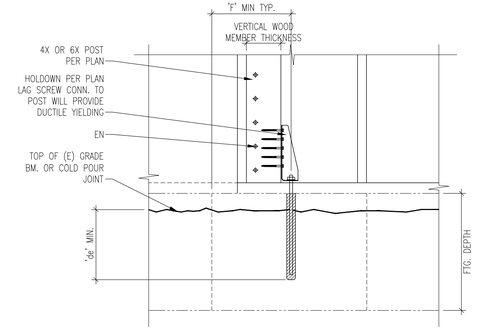

1. FOR HOLDOWNS, PER ASTM TEST STANDARDS, ANCHOR BOLT NUT SHOULD BE FINGER-TIGHT PLUS ⅓ TO ½ TURN WITH A HAND WRENCH, WITH CONSIDERATION GIVEN TO POSSIBLE FUTURE WOOD SHRINKAGE. CARE SHOULD BE TAKEN TO NOT OVER-TORQUE THE NUT. IMPACT WRENCHES SHOULD NOT BE USED.
2. TENSION VALUES ARE VALID FOR HOLDOWNS FLUSH OR RAISED OFF SILL PLATE.
3. NOTED HDU14 ALLOWABLE LOADS ARE BASED ON A 5½" WIDE POST (6X6 MIN.) ALL OTHER LOADS ARE BASED ON 3½" WIDE POST MINIMUM.
4. REQUIRES HEAVY HEX ANCHOR NUT TO ACHIEVE TABULATED LOADS (SUPPLIED WITH HOLDOWN).

ANCHOR BOLT SCHEDULE		
DIAMETER (inch.)	MIN. de(inch.)	EDGE DIST. 'F'
⅝"	7"	10½"
⅞"	11"	16½"
1"	12"	18"
NOTE: VALUES BASED ON ACI 318-11 APPENDIX D. USE SIMPSON SET-XP EPOXY CONTINUOUS SPECIAL INSPECTION REQUIRED (ICC-ES ESR 2508, LARR 25744).		

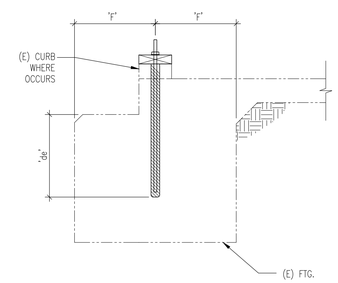

OPTIONAL HOLDOWN DETAIL

ANCHOR BOLT SCHEDULE				
MARK	MIN. END DIST.	MIN. EDGE DIST.	#3 TIES @ 4"O.C.	'de'
A	4½"	1.75"	NO	12"
B	5"	1.75"	YES	16"
C	5"	1.75"	YES	16"
D	5"	1.75"	YES	18"
E	7"	2"	YES	18"
F	7"	2.75"	YES	18"
G	9"	2.75"	YES	18"

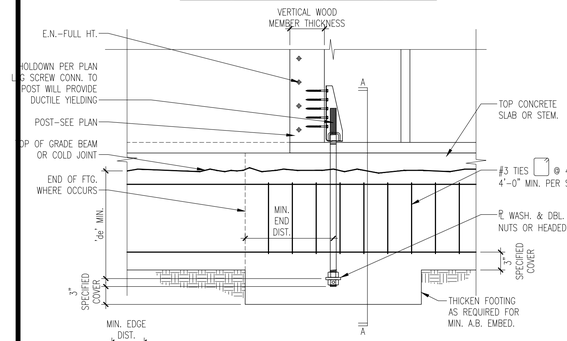

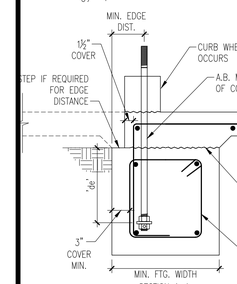

SECTION A-A
ANCHOR WITH NUT/WASHER/NUT

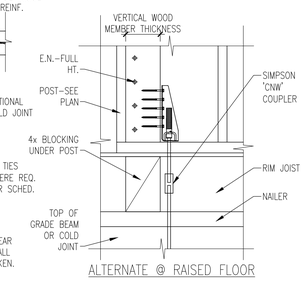

ALTERNATE @ RAISED FLOOR

DESIGN LOADS ARE CALCULATED USING A FULL SHEAR CONE. COVERAGE ON EACH SIDE OF THE BOLT SHALL BE A MINIMUM OF F OR REDUCTIONS MUST BE TAKEN.

1. ANCHOR EMBEDMENT LENGTH IS BASED ON A SINGLE POUR CONCRETE FOUNDATION WITHIN THE FOOTING DIMENSIONS de. DOUBLE POUR FOUNDATION SYSTEMS, MASONRY WALLS AND MASONRY FOOTINGS MUST BE EVALUATED BY THE DESIGNER.
2. ANCHOR BOLT MUST BE ASTM A307 OR A36 STEEL.
3. ANCHOR HEAD REQUIRED TWO HEX NUTS WITH A 2¼"x2¼"x⅜" PLATE. USE OF SIMPSON STRONG-TIE BEARING PLATE BP1 MAY BE USED AS A SUBSTITUTE FOR 1" DIAMETER BOLTS AND SIMPSON STRONG-TIE BEARING PLATE BP¾ MAY BE USED AS A SUBSTITUTE PLATE FOR ¾" DIAMETER BOLTS.
4. DESIGN VALUES ARE BASED ON ACI 318-11 APP. D. SEISMIC LOADS DUCTILITY REQUIREMENTS PER D.3.3.4 ARE CONSIDERED.
5. FOR HOLDOWNS, PER ASTM TEST STANDARDS, ANCHOR BOLT NUT SHOULD BE FINGER-TIGHT PLUS ⅓ TO ½ TURN WITH A HAND WRENCH, WITH CONSIDERATION GIVEN TO POSSIBLE FUTURE WOOD SHRINKAGE. CARE SHOULD BE TAKEN TO NOT OVER-TORQUE THE NUT. IMPACT WRENCHES SHOULD NOT BE USED.
6. TENSION VALUES ARE VALID FOR HOLDOWNS FLUSH OR RAISED OFF SILL PLATE.
7. REQUIRES HEAVY HEX ANCHOR NUT TO ACHIEVE TABULATED LOADS (SUPPLIED WITH HOLDOWN).

HOLDOWN DETAIL

SCALE: 1"=1'-0" | 2

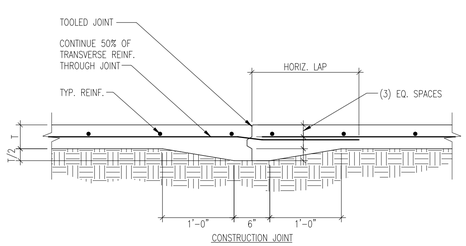

CONSTRUCTION JOINT

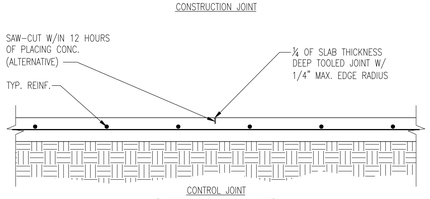

CONTROL JOINT
(WHERE CONT. POUR IS USED)

SLAB JOINTS

SCALE: 1"=1'-0" | 12

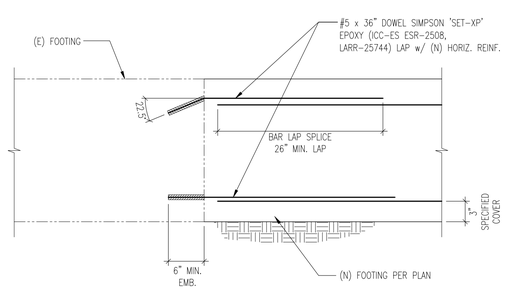

(N) TO (E) FTG.

SCALE: 1"=1'-0" | 9

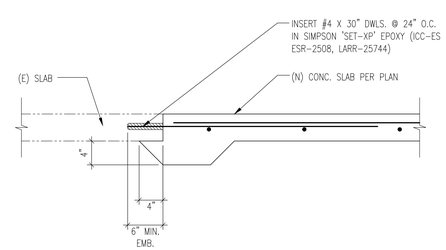

(N) SLAB TO (E) SLAB DOWELS

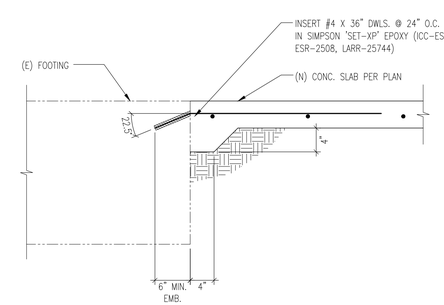

(E) FTG. TO (N) SLAB

(N) TO (E)

SCALE: 1"=1'-0" | 3

REVISIONS		
NO.	REVISION	DATE
1	PC CORRECTIONS	09/06/17

RGSE inc. Structural
2720 Cochran St. Suite 8B
Simi Valley, CA 93065
P : 805.522.3379
F : 805.378.7137
info@rgseinc.com
www.rgseinc.com

NEW CONSTRUCTION & RENOVATIONS
STONEBRIDGE COMMUNITY CHURCH
4832 COCHRAN STREET
SIMI VALLEY, CA. 93063

SHEET TITLE :
TYPICAL DETAILS

JOB NO: 16307
DRAWN: raulg@rgseinc.com
ENGINEER: sokheanc@rgseinc.com
DATE: 02/14/17
STAMP:

REGISTERED PROFESSIONAL ENGINEER RAMON GARCIA No. 4595 Exp. 6/30/2017 STRUCTURAL STATE OF CALIFORNIA
COPYRIGHT

S0.5

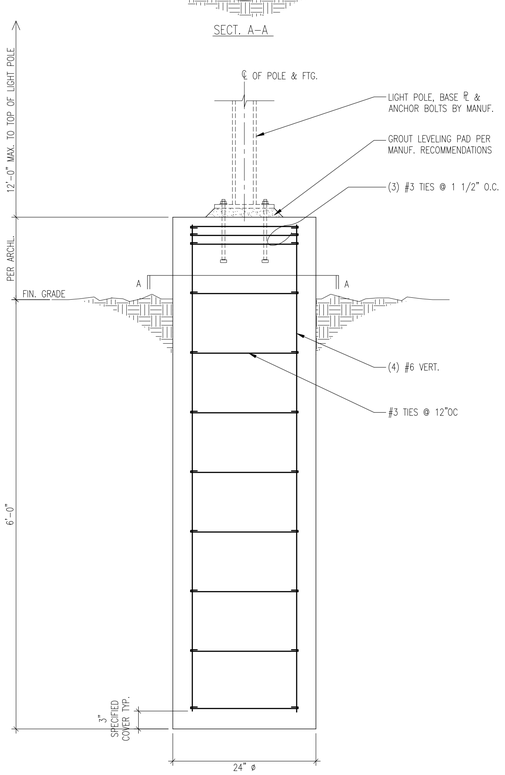

POLE FTG. SCALE: 1"=1'-0" 11

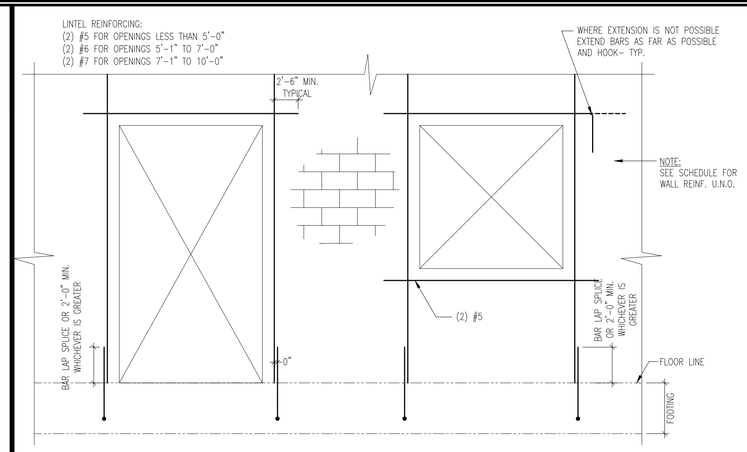

TYPICAL CMU REINF. SCALE: 1"=1'-0" 4

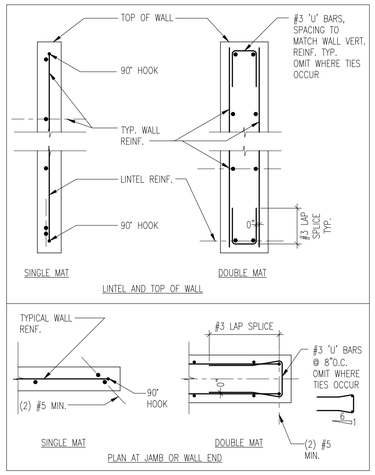

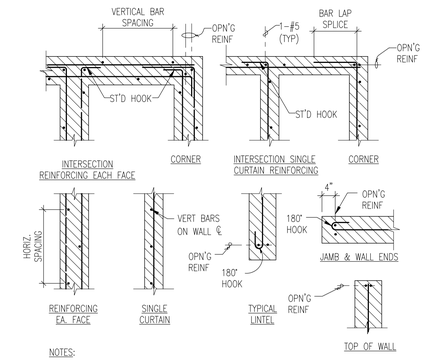

NOTES:

1. GROUT ALL CELLS OR CAVITIES SOLID.
2. AT CMU WALLS USE OPEN END BLOCK AT VERTICAL REINFORCING BARS.
3. REFER TO TYPICAL MASONRY WALL REINFORCING SCHEDULE.
4. AT DOUBLE CURTAIN REINFORCING STAGGER VERTICAL AND HORIZONTAL BARS. PLACE VERTICAL REBAR AS CLOSE TO MASONRY SURFACE AS THE MINIMUM CLEARANCES WILL PERMIT

TYPICAL MASONRY WALL DETAIL SCALE: 1"=1'-0" 1

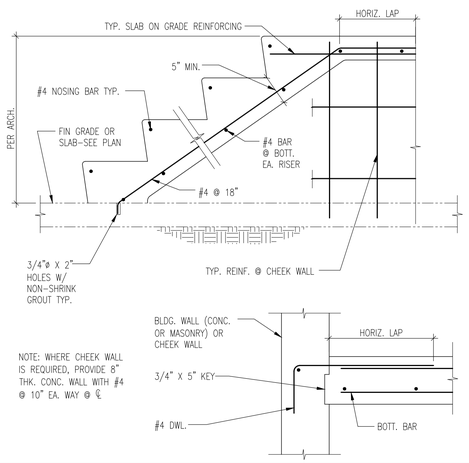

SECTION AT INTERIOR STAIRS SCALE: 1"=1'-0" 8

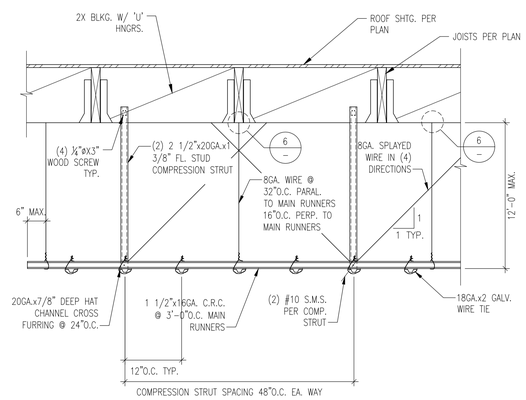

HEAVY DUTY CEILING DETAIL SCALE: 1"=1'-0" 5

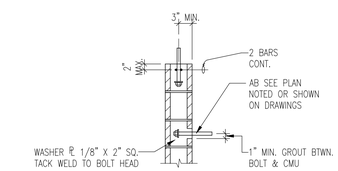

TYP. ANCHOR BOLTS IN MASONRY WALL SCALE: 1"=1'-0" 2

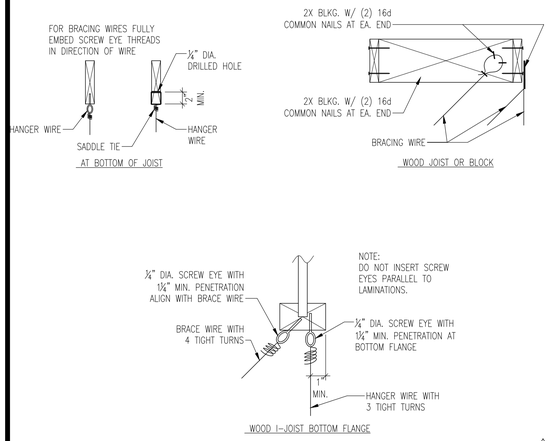

- SCALE: 1"=1'-0" 12

- SCALE: 1"=1'-0" 9

- SCALE: 1"=1'-0" 6

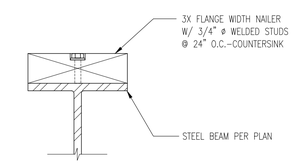

BEAM NAILER SCALE: 1"=1'-0" 3

REVISIONS		
NO.	REVISION	DATE
1	PC CORRECTIONS	09/06/17

RGSE inc. Structural
2720 Cochran St. Suite 8B
Simi Valley, CA 93065
P : 805.522.3379
F : 805.378.7137
info@rgseinc.com
www.rgseinc.com

NEW CONSTRUCTION & RENOVATIONS
STONEBRIDGE COMMUNITY CHURCH
4832 COCHRAN STREET
SIMI VALLEY, CA. 93063

SHEET TITLE :
TYPICAL DETAILS

JOB NO: 16307
DRAWN: raulg@rgseinc.com
ENGINEER: sokheanc@rgseinc.com
DATE: 02/14/17
STAMP:

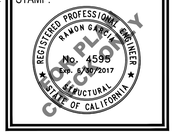

S0.6

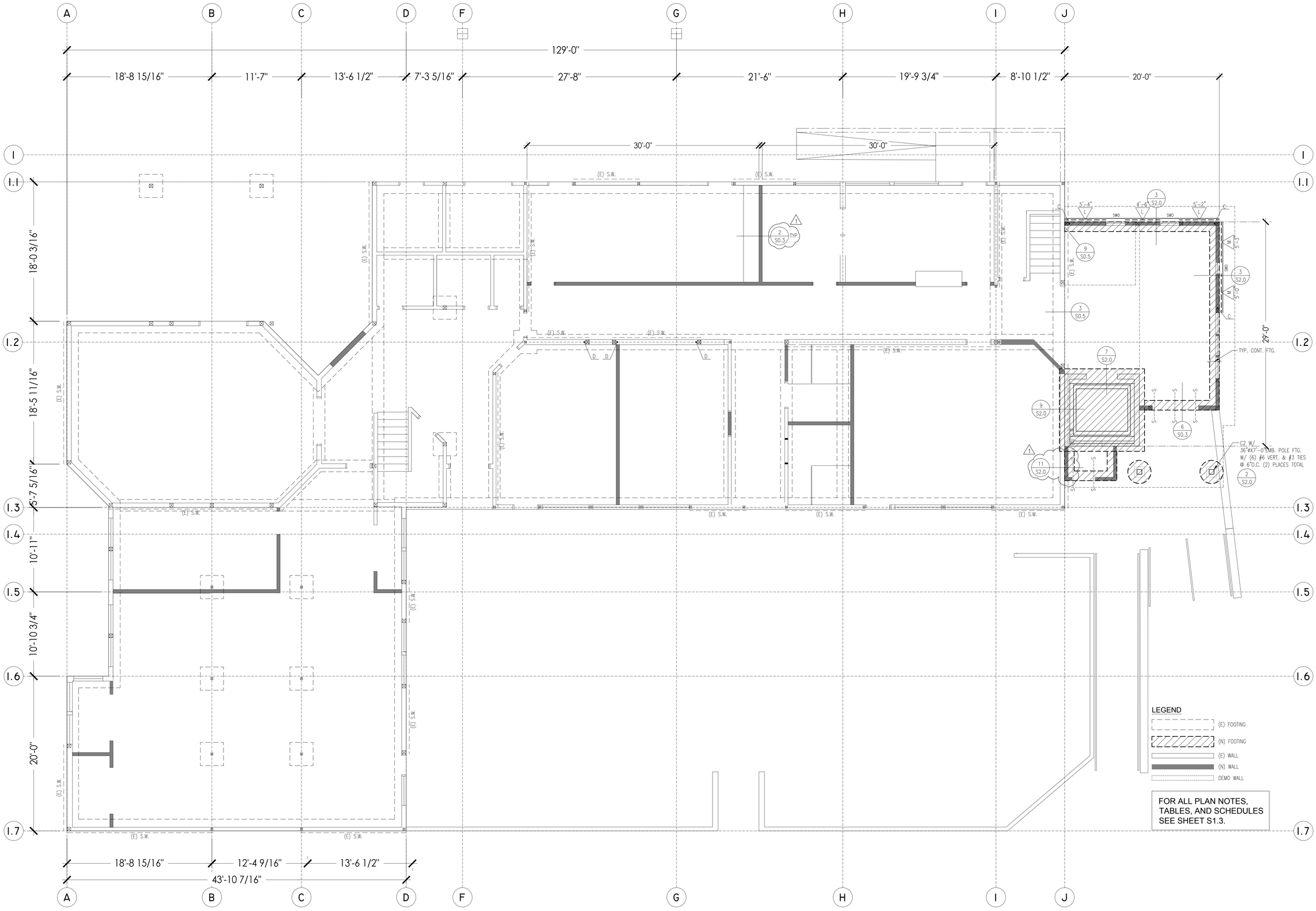

FAMILY LEARNING CENTER - FOUNDATION PLAN

SCALE: 3/16"=1'-0"

REVISIONS		
NO.	REVISION	DATE
1	PC CORRECTIONS	09/06/17

RGSE inc. Structural
2720 Cochran St. Suite 8B
Simi Valley, CA 93065
P : 805.522.3379
F : 805.378.7137
info@rgseinc.com
www.rgseinc.com

NEW CONSTRUCTION & RENOVATIONS
STONEBRIDGE COMMUNITY CHURCH
4832 COCHRAN STREET
SIMI VALLEY, CA. 93063

SHEET TITLE :
FAMILY LEARNING CENTER - FOUNDATION PLAN

JOB NO: 16307
DRAWN: raulg@rgseinc.com
ENGINEER: sokheanc@rgseinc.com
DATE: 02/14/17
STAMP:

REGISTERED PROFESSIONAL ENGINEER
RAMON GARCIA
No. 4596
Exp. 6/30/2017
STRUCTURAL
STATE OF CALIFORNIA
COPY ONLY

S1.0

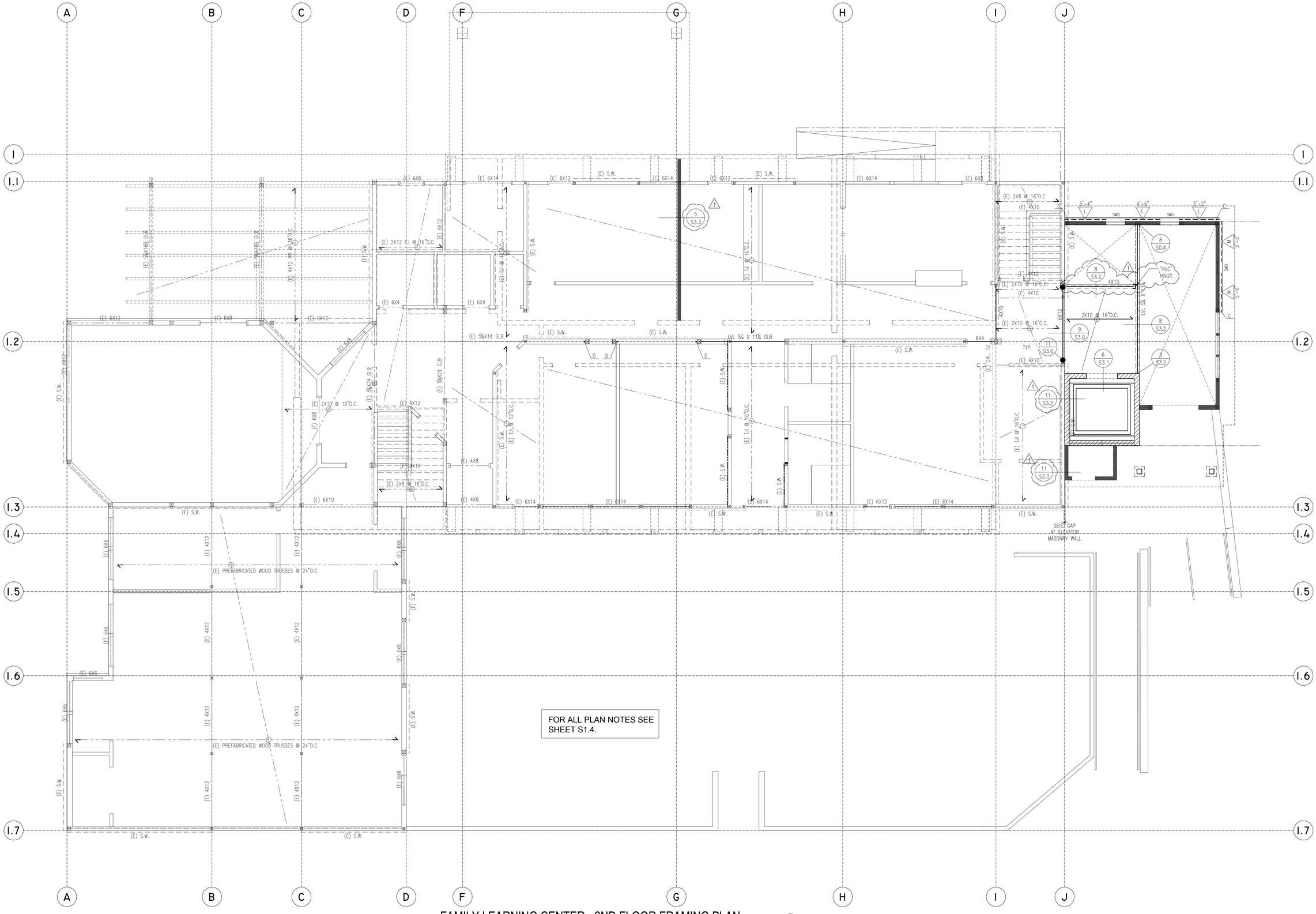

FAMILY LEARNING CENTER - 2ND FLOOR FRAMING PLAN

SCALE: 3/16"=1'-0"

N

REVISIONS		
NO.	REVISION	DATE
1	PC CORRECTIONS	09/06/17

RGSE inc. Structural
2720 Cochran St. Suite 8B
Simi Valley, CA 93065
P : 805.522.3379
F : 805.378.7137
info@rgseinc.com
www.rgseinc.com

NEW CONSTRUCTION & RENOVATIONS
STONEBRIDGE COMMUNITY CHURCH
4832 COCHRAN STREET
SIMI VALLEY, CA. 93063

SHEET TITLE :
FAMILY LEARNING CENTER - 2ND FLOOR FRMG PLAN

JOB NO: 16307
DRAWN: raulg@rgseinc.com
ENGINEER: sokheanc@rgseinc.com
DATE: 02/14/17
STAMP:

REGISTERED PROFESSIONAL ENGINEER
RAMON GARCIA
No. 4599
Exp. 6/30/2017
STRUCTURAL
STATE OF CALIFORNIA

COPYRIGHT

S1.1

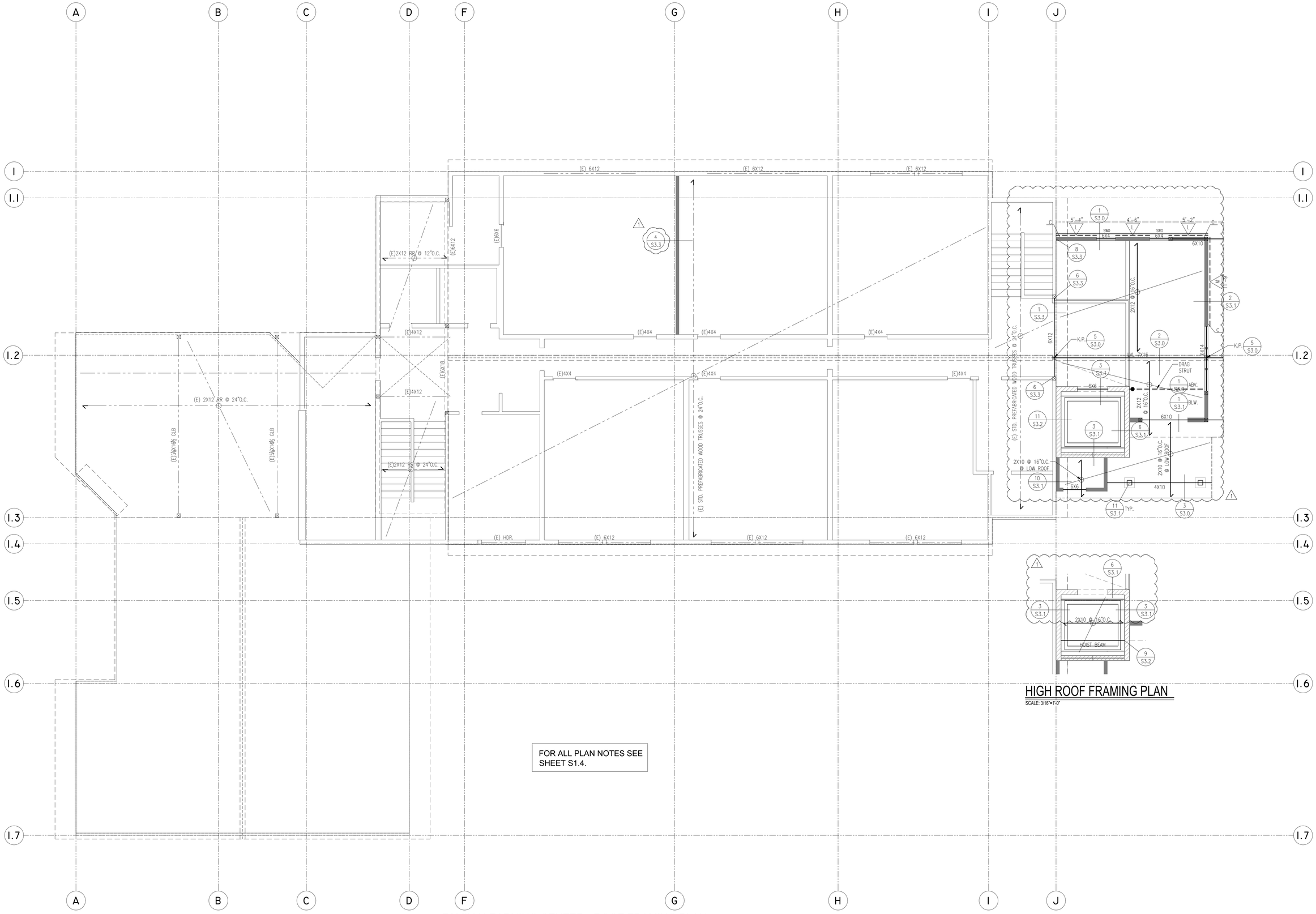

FOR ALL PLAN NOTES SEE SHEET S1.4.

HIGH ROOF FRAMING PLAN

SCALE: 3/16"=1'-0"

FAMILY LEARNING CENTER - ROOF FRAMING PLAN

SCALE: 3/16"=1'-0"

REVISIONS

NO.	REVISION	DATE
1	PC CORRECTIONS	09/06/17

RGSE inc. Structural
2720 Cochran St. Suite 8B
Simi Valley, CA 93065
P : 805.522.3379
F : 805.378.7137
info@rgseinc.com
www.rgseinc.com

NEW CONSTRUCTION & RENOVATIONS
STONEBRIDGE COMMUNITY CHURCH
4832 COCHRAN STREET
SIMI VALLEY, CA. 93063

SHEET TITLE :
FAMILY LEARNING CENTER - ROOF FRAMING PLAN

JOB NO: 16307
DRAWN: raulg@rgseinc.com
ENGINEER: sokheanc@rgseinc.com
DATE: 02/14/17
STAMP: REGISTERED PROFESSIONAL ENGINEER RAMON G. GIL-CARCELES No. 4595 Exp. 12/31/2017 STRUCTURAL STATE OF CALIFORNIA
COPY ONLY

S1.2

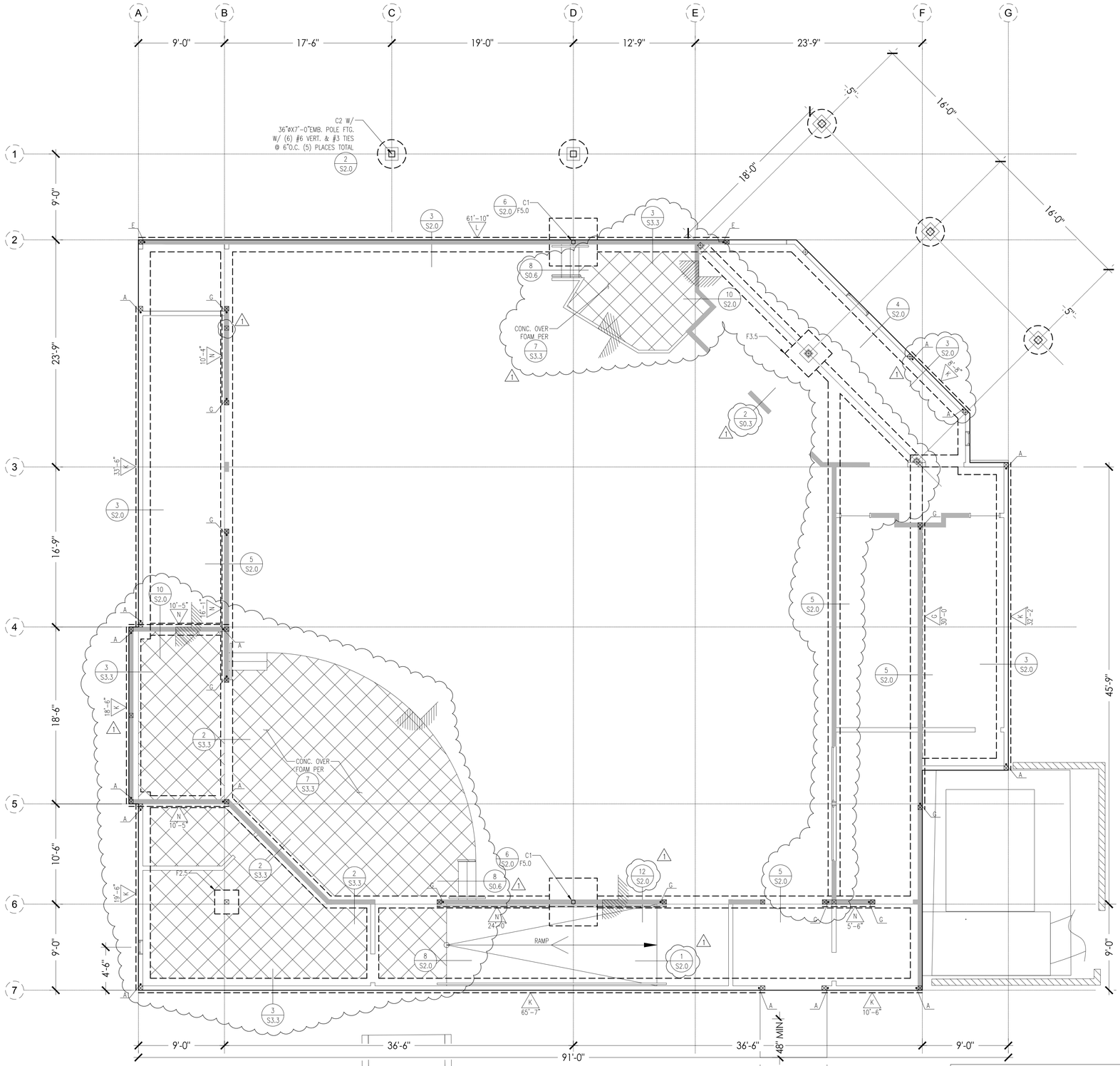

SANCTUARY - FOUNDATION PLAN

SCALE: 3/16"=1'-0"

FOUNDATION NOTES:

1. SEE FOUNDATION NOTES ON SHEET S0.0 FOR DESIGN SOIL BEARING PRESSURE, ETC.
2. C1 –INDICATES COLUMN MARK, FOR SIZE SEE SCHEDULE SHEET S1.3
   F1 –INDICATES FOOTING MARK, FOR SIZE SEE SCHEDULE SHEET S1.3
3. K INDICATES SHEAR WALL MARK, SEE SCHEDULE SHEET S1.3.
4. A INDICATES A HOLDOWN MARK, SEE SCHEDULE SHEET S1.3.
5. S-------S INDICATES STEPPED FOOTING PER DETAIL 6/S0.3
6. AT EXTERIOR STUD WALLS WITH NO SHEAR WALL DESIGNATION, USE ⅝" ø ANCHOR BOLTS @ 48" O.C.
7. SEE ARCH. FOR ALL DIMENSIONS & CONDITIONS NOT SHOWN.
8. PRIOR TO THE CONTRACTOR REQUESTING A BUILDING DEPT. FOUNDATION INSPECTION, THE SOILS ENGINEER SHALL ADVISE THE BUILDING OFFICIAL IN WRITING THAT:
   A. THE BUILDING PAD WAS PREPARED IN ACCORDANCE WITH THE SOILS REPORT.
   B. THE UTILITY TRENCHES HAVE BEEN PROPERLY BACK FILLED & COMPACTED.
   C. THE FOUNDATION EXCAVATIONS COMPLY WITH THE INTENT OF THE SOILS REPORT.
9. ALL HOLDOWNS AND ANCHOR BOLTS AT SHEARWALL SHALL BE SET IN PLACE BY TEMPLATE PRIOR TO FOUNDATIONS INSPECTION AND RETIGHTENED PRIOR TO COVERING OF WALLS.
10. TYPICAL CONCRETE SLAB ON GRADE SHALL BE 5" THICK WITH #4 @ 18"O.C. EA. WAY MID HT. OVER 4" OF SAND. RECOMPACT SOILS PER THE RECOMMENDATIONS OF THE SOILS REPORT. MAXIMUM SPACING OF THE CONTROL JOINTS SHALL BE 10'-0" EA. WAY. IN AREAS WITH MOISTURE SENSITIVE FLOORING, USE 10MIL VISQUEEN VAPOR BARRIER MID. HT. OF SAND. SEE SOILS REPORT FOR SPECIAL SLAB REQUIREMENTS.
11. ALL FOOTINGS ARE CENTERED UNDER COLUMNS AND BEARING WALLS UNLESS NOTED OTHERWISE ON PLANS AND DETAILS.
12. SEE ARCHITECTURAL PLANS FOR LOCATIONS OF ALL WALL OPENINGS, SLOPED AND DEPRESSED SLABS, CONCRETE CURBS, ADDITIONAL EMBEDDED ITEMS NOT SHOWN ON THESE DRAWINGS. VERIFY ALL BUILDING DIMENSIONS, SLOPES AND DEPRESSED SLAB DIMENSIONS WITH ARCHITECTURAL PLANS BEFORE BEGINNING WORK. REPORT ANY DISCREPANCIES TO THE ARCHITECT FOR RESOLUTION.
13. SEE GENERAL NOTES AND SPECIFICATIONS FOR SPECIAL GRADING REQUIREMENTS UNDER FOOTINGS.
14. COLUMNS ARE ONE SIZE FROM FOUNDATION TO ROOF UNLESS OTHERWISE NOTED ON PLANS
15. ALL DIMENSIONS SHOWN ARE TO EDGE OF CONCRETE SLAB, CENTER OF INTERIOR WALL, OR CENTERLINE OF POST OR COLUMN. REFER TO ARCHITECTURAL PLANS FOR OTHER DIMENSIONS.
16. U.N.O. MINIMUM REINFORCEMENT OF ALL 8" MASONRY BLOCK WALLS SHALL BE #5 VERTICAL BARS @ 16"O.C. CENTERED IN WALL, AND #4 HORIZONTAL BARS @ 16"O.C. REFER TO PLANS AND DETAILS FOR ADDITIONAL REINFORCEMENT REQUIREMENTS. SPECIAL INSPECTION REQUIRED. SOLID GROUT ALL CELLS.
17. ALL COLUMNS ARE CENTERED ON THE GRID LINES UNLESS NOTED OTHERWISE.
18. ALL CONCRETE FLOORS TO BE FLAT U.N.O.
19. NEW TYPICAL CONTINUOUS FOOTINGS ARE 15" WIDE X 24" DEEP BELOW LOWEST ADJACENT GRADE WITH (2) #5 T&B (4) TOTAL, U.N.O.
20. SURFACE WATER SHALL DRAIN AWAY FROM THE BUILDING. COORDINATE WITH CIVIL & LANDSCAPE.
21. CONTRACTOR SHALL COORDINATE ALL UNDERGROUND UTILITY WORK TO AVOID CONFLICTS WITH FOOTINGS.
22. CONTRACTOR SHALL SUBMIT PROPOSED FIRE RISER, CONDUIT, PIPING SLEEVE LOCATION FOR ENGINEER'S REVIEW PRIOR TO FOOTING CONSTRUCTION.
23. SEE ARCH'L AND CIVIL DRAWINGS FOR LOCATION OF MOISTURE BARRIER, CURBS, TRASH ENCLOSURES, EXTERIOR SLABS, DRAINAGE, RAMPS, WALKS, ETC.
24. FOR FOOTINGS OUTSIDE THE BUILDING ENVELOPE, COORDINATE TOP OF FOOTING ELEVATION WITH THE STRUCTURAL DETAILS AND WITH CIVIL AND LANDSCAPE.
25. BUILDING SLAB IS NOT DESIGNED TO SUPPORT CRANE LOADS, CONCRETE MIXING TRUCKS, OR OTHER SPECIFIC CONSTRUCTION LOADING. IF SUCH LOADS OCCUR, THE CONTRACTOR SHALL BE RESPONSIBLE FOR UPGRADING THE SLAB THICKNESS AND PROVIDING REINFORCING AS REQUIRED. ANY DAMAGE CAUSED TO THE SLAB SHALL BE REPAIRED AT THE CONTRACTOR'S EXPENSE PER THE OWNER'S REQUEST.
26. EXCAVATIONS SHALL BE MADE IN COMPLIANCE WITH CAL/OSHA REGULATIONS.
27. 1 ALL ANCHOR BOLTS SHALL INCLUDE A MIN. 0.229"X3"X3" STEEL PLATE WASHER. THE HOLE IN THE PLATE WASHER SHALL BE PERMITTED TO BE DIAGONALLY SLOTTED WITH A WIDTH OF UP TO ⅜"ø LARGER THAN THE BOLT DIAMETER AND A SLOT LENGTH NOT TO EXCEED 1¾", PROVIDED A STANDARD CUT WASHER IS PLACED BETWEEN THE PLATE WASHER AND THE NUT. THE PLATE WASHER SHALL EXTEND TO WITHIN ⅛" OF THE EDGE OF THE BOTTOM PLATE ON THE SIDE(S) FOR SHEATHING WITH SHEAR DESIGN VALUES EXCEEDING 400 PLF. (AF&PA SDPWS SECTION 4.3.6.4.3)

SHEAR WALL SCHEDULE

MARK	ALLOW. SHEAR	MIN. MUD SILL[1]	STUD OR BLKG AT ADJOINING PANEL EDGES	PERIODIC SPEC. INSP. PER 1705.11.2	APA RATED OSB	EDGE NAILING	FIELD NAILING	FASTENERS @ 2x SOLE PLATE TO BLKG.[1,2]	MUDSILL ANCHORS 2X MUDSILL	MUDSILL ANCHORS 3X MUDSILL[1]	'A35' OR 'LTP4' BLKG. TO TOP PLATE
K	280 #/'	2X	2X	NO	15/32" STR 1	8d @ 6" O.C.	12"O.C.	16d COMMON @ 9" O.C.	⅝"X10 @ 4'-0"	⅝"X12 @ 4'-0"	19" O.C. MAX
L	430 #/'	3X	3X	NO	15/32" STR 1	8d @ 4" O.C.	12"O.C.	16d COMMON @ 6" O.C.	⅝"X10 @ 1'-8"	⅝"X12 @ 4'-0"	12" O.C. MAX
M	550 #/'	3X	3X	YES	15/32" STR 1	8d @ 3" O.C.	12"O.C.	16d COMMON @ 5" O.C.	⅝"X10 @ 1'-4"	⅝"X12 @ 3'-5"	9" O.C. MAX
N	730 #/'	3X	3X	YES	15/32" STR 1	8d @ 2" O.C.	12"O.C.	16d COMMON @ 3" O.C.	N/A	⅝"X12 @ 2'-7"	7" O.C. MAX

1. 3X SILL PL ONLY OCCURS AT FOUNDATIONS AND STRUCTURAL SLABS, AND NOT ON UPPER FLOORS.
2. USE 1¾"X MIN. BLKG. BLW MIN. WHERE 16d < 4"O.C. OR SDS LAGS OCCUR.
3. WALL SHALL BE FRAMED WITH STUDS AT 16" O.C. OR PANELS ARE APPLIED WITH LONG DIMENSION ACROSS STUDS.
4. ALL FRAMING MEMBERS RECEIVING EDGE NAILING FROM ABUTTING PANELS SHALL NOT BE LESS THAN A SINGLE 3-INCH NOMINAL MEMBER OR TWO 2-INCH NOMINAL MEMBERS FASTENED IN ACCORDANCE WITH SECTION 2306.1 TO TRANSFER THE DESIGN SHEAR VALUE BETWEEN FRAMING MEMBERS. WOOD STRUCTURAL PANEL JOINT AND SILL PLATE NAILING SHALL BE STAGGERED IN ALL CASES.
5. PROVIDE E.N. AT ALL HOLDOWN POSTS INCLUDING ALL THREAD SYSTEMS.

HOLDOWN SCHEDULE

MARK	ALLOW. LOAD	ICC ESR #	COLA ALLOW. LOAD	LARR #	MIN. WOOD MEMBER THICKNESS	HOLDOWN SIZE	POST FASTENERS	FOUNDATION BOLT PER SCHED ON DETAIL	DETAIL @ FOUNDATION	DETAIL @ (E) CONC. FTG.
A	3075 lb.	2330	2306 lb.	25720	(2) 2X4	SIMPSON HDU2-SDS2.5	(6) SDS ¼" X 2½" SCREWS	SSTB24	2/S0.5	5/S0.5
C	5645 lb.	2330	4233 lb.	25720	4X4	SIMPSON HDU5-SDS2.5	(14) SDS ¼" X 2½" SCREWS	⅝"ø	2/S0.5	2/S0.5
D	6970 LB	2330	5227 lb.	25720	4X4	SIMPSON HDU8-SDS2.5	(20) SDS ¼" X 2½" SCREWS	⅞"ø	2/S0.5	2/S0.5
E	9535 lb.	2330	7151 lb.	25720	4X6	SIMPSON HDU11-SDS 2.5	(30) SDS ¼" X 2½" SCREWS	1"ø	2/S0.5	5/S0.5
G	14445 lb.	2330	10833 lb.	25720	6X6	SIMPSON HDU14-SDS 2.5	(36) SDS ¼" X 2½" SCREWS	1"ø	2/S0.5	5/S0.5

NOTE:
1. MAXIMUM HOLDOWN SYSTEM DEFLECTION PER FLOOR SHALL BE .2" TYP. U.N.O.
2. WHEN ALTERNATIVE CONTINUOUS ROD SYSTEMS ARE USED TO RESIST LIGHT-FRAME SHEAR WALL OVERTURNING FORCES, CALCULATIONS MUST BE SUBMITTED TO THE CODE OFFICIAL CONFIRMING THAT THE TOTAL VERTICAL DISPLACEMENT, WHICH WOULD INCLUDE STEEL ROD ELONGATION AND THE SHRINKAGE COMPENSATING DEVICE DEFLECTION, IS LESS THAN OR EQUAL TO 0.200 INCH (5 mm) FOR EACH STORY, OR BETWEEN RESTRAINTS, WHICHEVER IS MORE RESITRICTIVE, USING ALLOWABLE STRESS DESIGN (ASD). SHEAR WALL DRIFT LIMIT CALCULATIONS MUST CONSIDER THE 0.200 INCH VERTICAL DISPLACEMENT LIMIT.

FOOTING SCHEDULE (2000 PSF ALLOW. BRNG.)

MARK	FOOTING SIZE	THICKNESS	REINFORCEMENT	ALLOW. LOAD	ALLOW. X 1.33	ALLOW. UPLIFT
F2.5	2'-6" x 2'-6"	1'-0"	(3) #5 E.W.	12.5K	16.6K	.63K
F3.5	3'-6" x 3'-6"	1'-0"	(4) #5 E.W.	24.5K	32.5K	1.23K
F5.0	5'-0" x 5'-0"	1'-0"	(6) #5 E.W.	50K	66.5K	2.5K

NOTE: E.W. = EACH WAY

COLUMN SCHEDULE

MARK	COLUMN SIZE	BASE PLATE SIZE	ANCHOR BOLTS	BOLT LAYOUT	REMARKS
C1	HSS5X5X5/16	11" SQ. X ½" THK.	(4) ⅜"ø X 8" EMB.	1 A	
C2	HSS8X8X5/16	14" SQ. X ¾" THK.	(4) ¾"ø X 18" EMB.	A	

NOTES:

WALL LEGEND:

INDICATES DOUBLE LVL 1¾ X 7¼ STUDS @ 16"O.C.

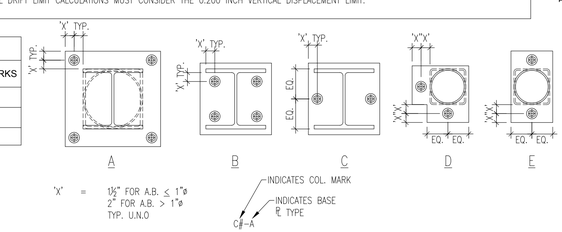

REVISIONS		
NO.	REVISION	DATE
1	PC CORRECTIONS	09/06/17

RGSE inc. Structural
2720 Cochran St. Suite 8B
Simi Valley, CA 93065
P : 805.522.3379
F : 805.378.7137
info@rgseinc.com
www.rgseinc.com

NEW CONSTRUCTION & RENOVATIONS
STONEBRIDGE COMMUNITY CHURCH
4832 COCHRAN STREET
SIMI VALLEY, CA. 93063

SHEET TITLE : SANCTUARY - FOUNDATION PLAN

JOB NO: 16307
DRAWN: raulg@rgseinc.com
ENGINEER: sokheanc@rgseinc.com
DATE: 02/14/17
STAMP: REGISTERED PROFESSIONAL ENGINEER RAMON G. RIVERA No. 4599 Exp. 6/30/2017 STRUCTURAL STATE OF CALIFORNIA

S1.3

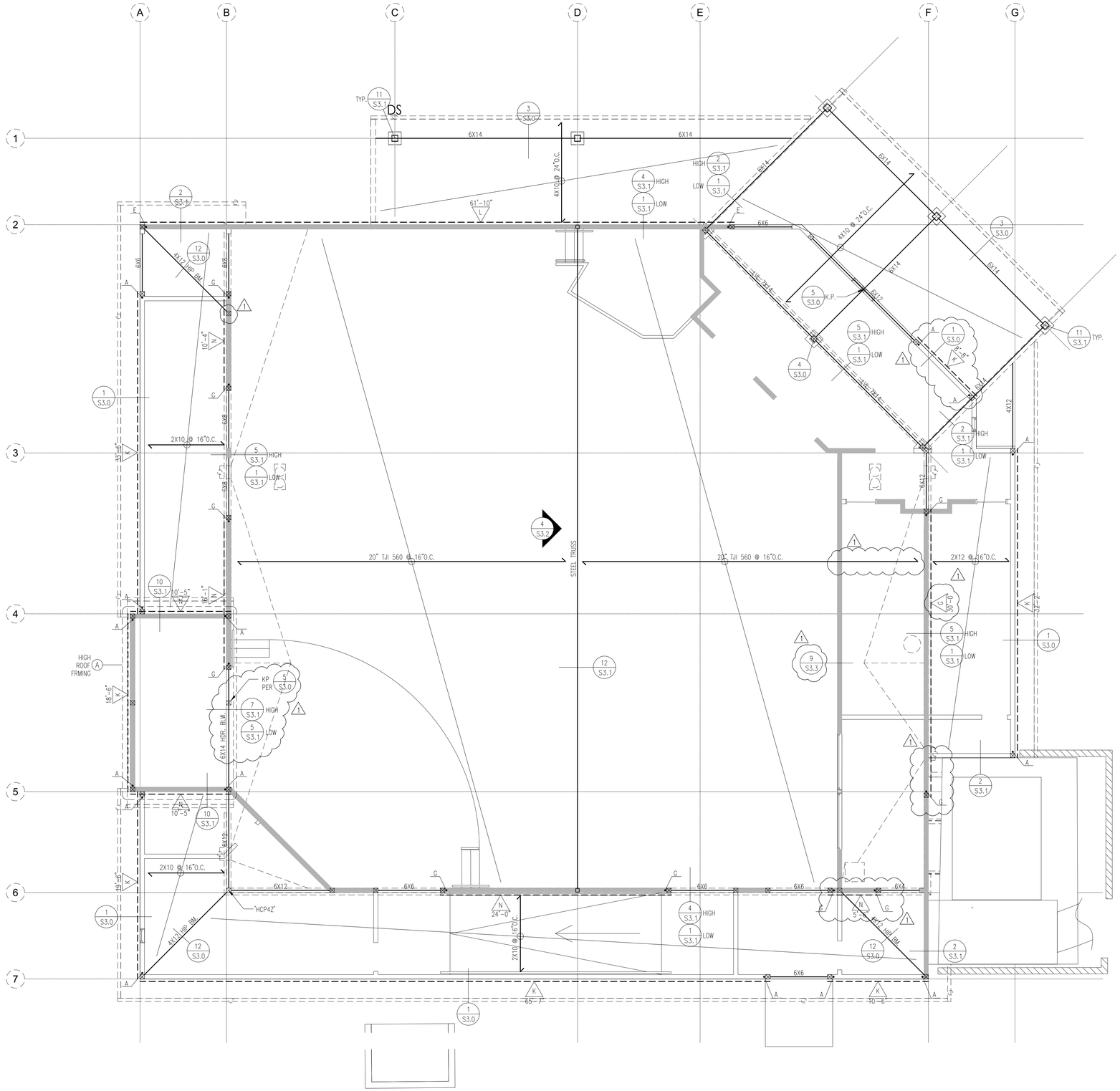

SANCTUARY - ROOF FRAMING PLAN

SCALE: 3/16"=1'-0"

N

FRAMING NOTES:

1. PROVIDE 2X TRIMMER @ 7¾ OR LESS HEADER (2) 2X TRIMMER @ 9½ OR GREATER & 4X POST TRIMMER @ GLB HEADER PER DETAIL 1/S0.4
2. ALL EXTERIOR WALLS TO BE 2 X 6 STUDS @ 16" O.C., U.N.O.
3. ALL EXTERIOR WALLS SHALL BE 100% SHEATHED. EXTERIOR WALLS WITHOUT SHEARWALL SHEATHING SHALL HAVE SUBSTRATE SHEATHING PER ARCHITECTURAL DRAWINGS.
4. FOR TYPICAL STUD WALL FRAMING SEE 1/S0.4
5. PROVIDE MULTIPLE STUDS UNDER MULTIPLE JOISTS.
6. PROVIDE BOUNDARY NAILING ALONG ALL STRUT MEMBERS, INTERIOR SHEAR WALLS, AND INTERIOR LATERAL FRAMES U.N.O.
7. CONTRACTOR SHALL COORDINATE ALL MECH'L. UNIT LOCATIONS, SIZES, OPENINGS, ETC. WITH MECH'L. DRAWINGS.
8. SEE ARCH. FOR ALL DIMENSIONS & CONDITIONS NOT SHOWN.
9. K INDICATES SHEAR WALL MARK FOR WALLS BELOW U.N.O., SEE SCHEDULE SHEET S1.0.
10. A INDICATES A HOLDOWN MARK FOR SHEAR WALLS FOR THE LEVEL BELOW U.N.O., SEE SCHEDULE SHEET S1.0.
11. 'SWO' INDICATES SHEAR WALL OPENING PER DETAIL 9/S0.4
12. TYPICAL FLOOR SHEATHING SHALL BE 23/32" APA RATED SHEATHING, STURD-I-FLOOR, OR SINGLE FLOOR (EXPOSURE 1) (40/20) W/ 10d COMMON NAILS @ 6"O.C. BOUNDARIES & CONT. PANEL EDGES, 6"O.C. OTHER PANEL EDGES, AND 12"O.C. FIELD NAILING. (UN-BLOCKED, T&G @ UNSUPPORTED PANEL EDGES)
13. TYPICAL ROOF SHEATHING SHALL BE 15/32" (STRUCTURAL I) W/ 10d COMMON NAILS @ 6"O.C. BOUNDARIES & CONT. PANEL EDGES, 6"O.C. OTHER PANEL EDGES, AND 12"O.C. FIELD NAILING. (UN-BLOCKED, T&G @ UNSUPPORTED PANEL EDGES)
14. UNLESS SPECIFICALLY NOTED ON THE PLANS, FRAMING SHALL NOT BE CUT OR RELOCATED WITHOUT PRIOR APPROVAL OF THE STRUCTURAL ENGINEER. CONTRACTOR SHALL OBTAIN APPROVAL OF JOIST MFR. SHOP DRAWINGS FROM BOTH MECHANICAL AND STRUCTURAL ENGINEERS PRIOR TO ERECTION OF JOIST FRAMING.
15. ALL MULTIPLE JOISTS SHALL HAVE EACH JOIST NAILED TO THE ADJACENT ONE WITH 16d @ 16"O.C. STAGGERED.
16. ALL MULTIPLE STUDS SHALL HAVE EACH STUD NAILED TO THE ADJACENT ONE WITH SOLE PLATE NAILING PER SHEAR WALL SCHEDULE, 10d @9"O.C. STAGGERED MINIMUM.
17. FOR HEADER SIZES NOT NOTED, REFER TO TYPICAL DETAIL SCHEDULE.
18. FOR LOW SPOTS CREATED BY THE ROOF PITCH SHALL BE PROVIDED WITH CRICKETS AS REQUIRED TO SLOPE AS REQUIRED.
19. BALLOON FRAME ALL GABLE END WALLS U.N.O.
20. ALL ARCHITECTURALLY EXPOSED STRUCTURAL STEEL (AESS) SHALL MEET THE MINIMUM SPECIFICATIONS IN THE AISC CODE OF STANDARD PRACTICE CHAPTER 10 UNLESS NOTED OTHERWISE ON THE ARCHITECTURAL DRAWINGS.
21. ⊠ 6X POST U.N.O.

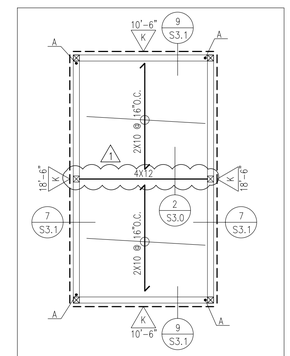

HIGH ROOF FRAMING PLAN

SCALE: 3/16"=1'-0"

WALL LEGEND:

INDICATES DOUBLE LVL 1¾ X 7¼ STUDS @ 16"O.C.

REVISIONS		
NO.	REVISION	DATE
1	PC CORRECTIONS	09/06/17

RGSE inc. Structural
2720 Cochran St. Suite 8B
Simi Valley, CA 93065
P : 805.522.3379
F : 805.378.7137
info@rgseinc.com
www.rgseinc.com

NEW CONSTRUCTION & RENOVATIONS
STONEBRIDGE COMMUNITY CHURCH
4832 COCHRAN STREET
SIMI VALLEY, CA. 93063

SHEET TITLE :
SANCTUARY - ROOF FRAMING PLAN

JOB NO: 16307
DRAWN: raulg@rgseinc.com
ENGINEER: sokheanc@rgseinc.com
DATE: 02/14/17
STAMP:

REGISTERED PROFESSIONAL ENGINEER
RAMON GARCIA
No. 4599
Exp. 6/30/2017
STRUCTURAL
STATE OF CALIFORNIA

COPYRIGHT

S1.4

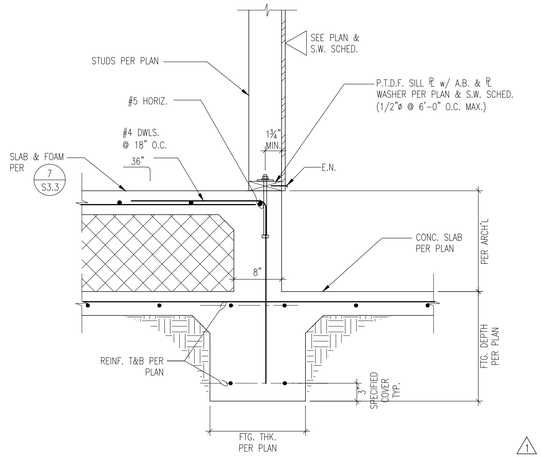

SECTION AT SLAB STEP SCALE: 1"=1'-0" 10

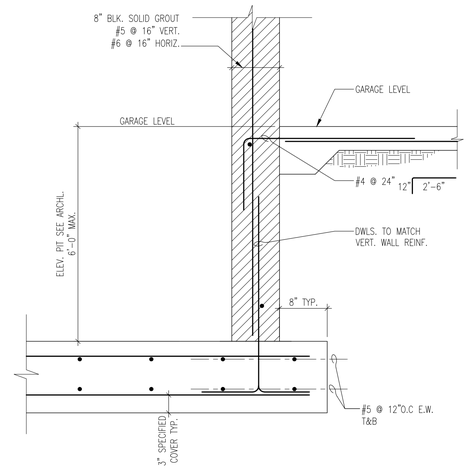

ELEVATOR WALL SCALE: 1"=1'-0" 7

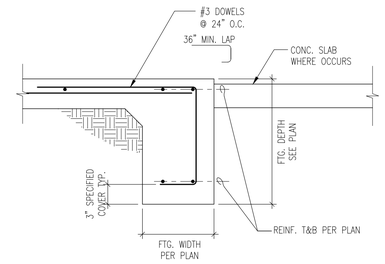

SECTION AT OPNG. SCALE: 1"=1'-0" 4

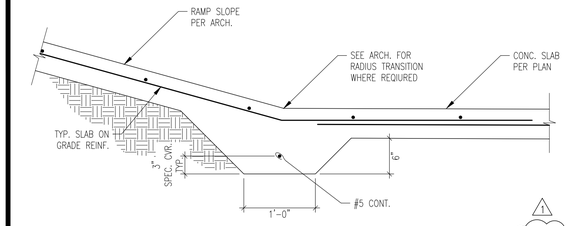

RAMP SECTION SCALE: 1"=1'-0" 1

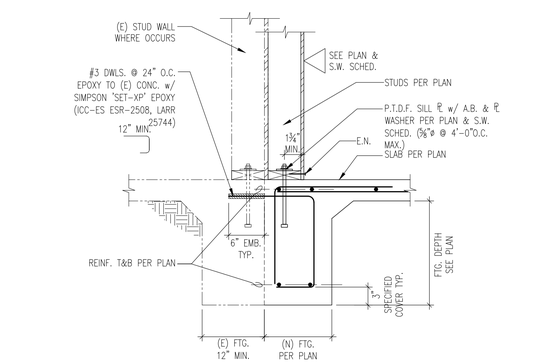

SECTION AT DBL. WALL SCALE: 1"=1'-0" 11

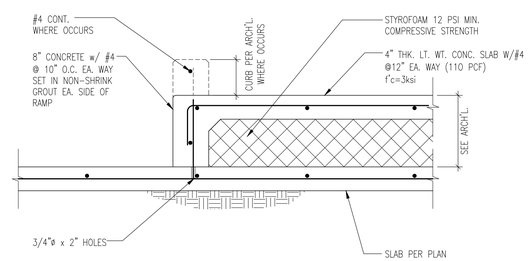

SLAB DETAIL SCALE: 1"=1'-0" 8

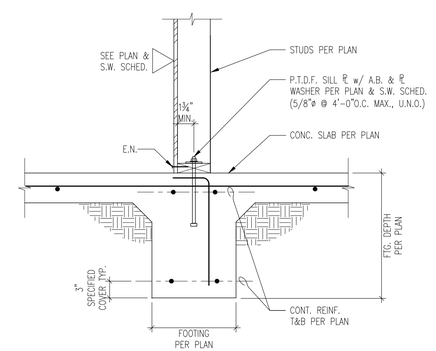

INTERIOR SECTION SCALE: 1"=1'-0" 5

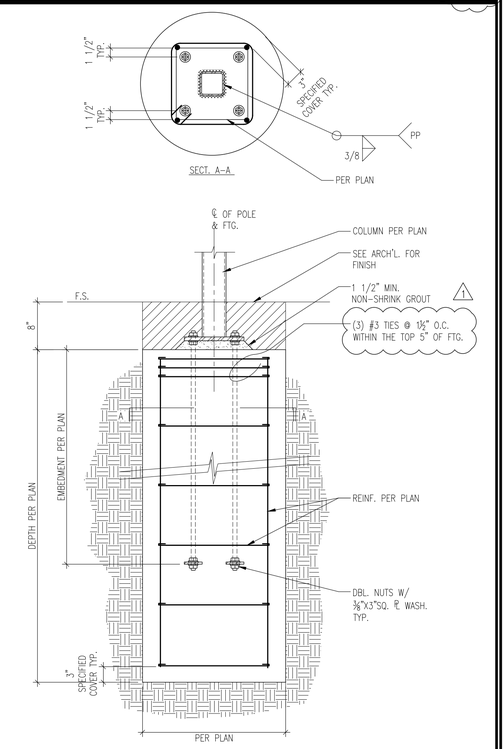

POLE FTG. SCALE: 1"=1'-0" 2

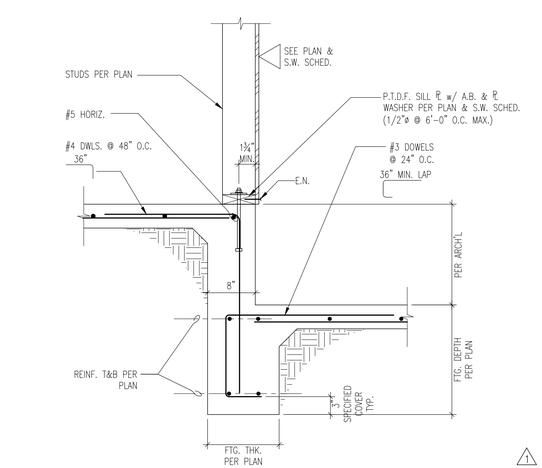

SECTION AT SLAB STEP SCALE: 1"=1'-0" 12

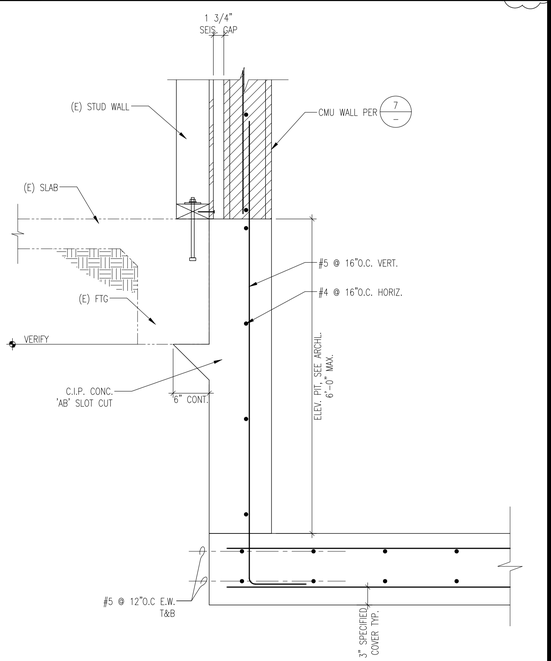

SETION AT ELEV. PIT SCALE: 1"=1'-0" 9

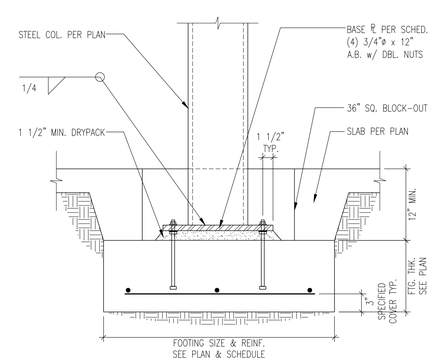

STL. COLUMN FTG. SCALE: 1"=1'-0" 6

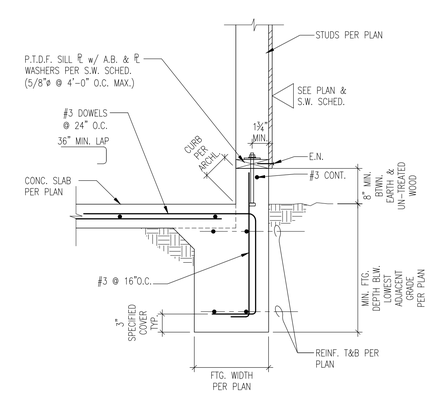

EXTERIOR FOOTING SECTION SCALE: 1"=1'-0" 3

REVISIONS

NO.	REVISION	DATE
1	PC CORRECTIONS	09/06/17

RGSE inc. Structural
2720 Cochran St. Suite 8B
Simi Valley, CA 93065
P : 805.522.3379
F : 805.378.7137
info@rgseinc.com
www.rgseinc.com

NEW CONSTRUCTION & RENOVATIONS
STONEBRIDGE COMMUNITY CHURCH
4832 COCHRAN STREET
SIMI VALLEY, CA. 93063

SHEET TITLE :
FOUNDATION DETAILS

JOB NO: 16307
DRAWN: raulg@rgseinc.com
ENGINEER: sokheanc@rgseinc.com
DATE: 02/14/17
STAMP: REGISTERED PROFESSIONAL ENGINEER RAMON GARCIA No. 4595 Exp. 6/30/2017 STRUCTURAL STATE OF CALIFORNIA
COPYRIGHT

S2.0

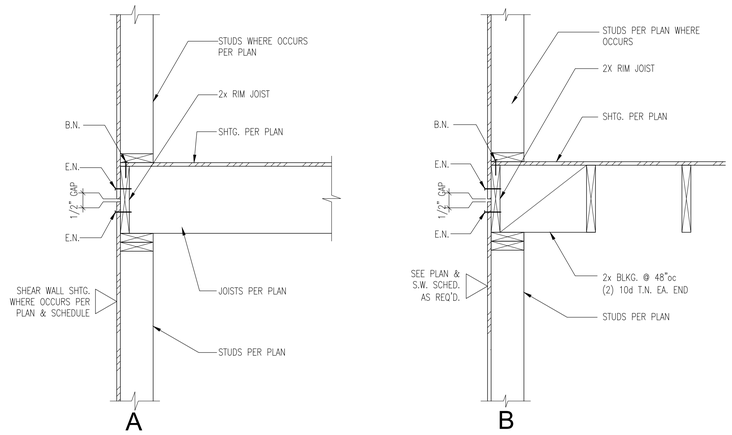

SECTION AT WALL

SCALE: 1"=1'-0" | 7

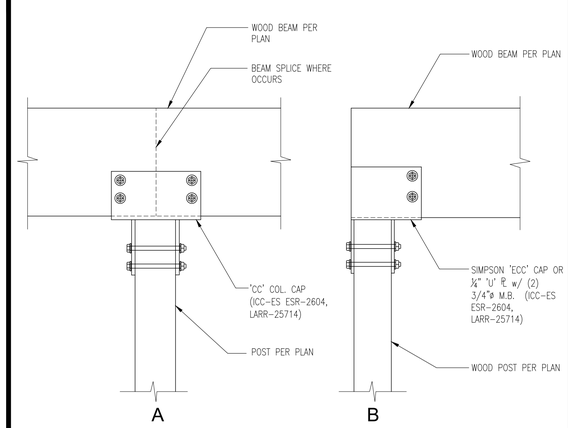

SECTION AT POST

SCALE: 1"=1'-0" | 4

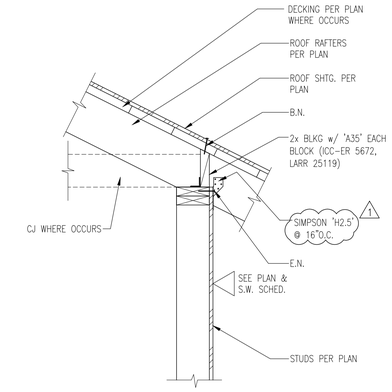

EAVE SECTION

SCALE: 1"=1'-0" | 1

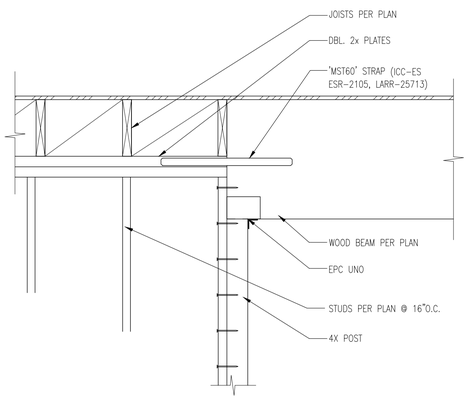

STRUT DETAIL

SCALE: 1"=1'-0" | 11

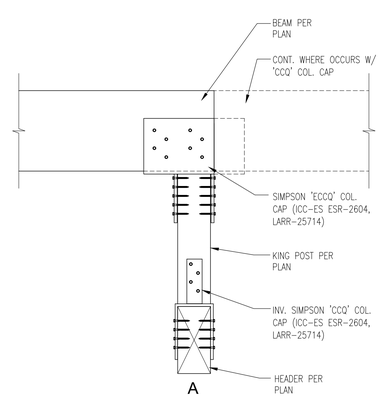

K.P. DETAIL

SCALE: 1"=1'-0" | 5

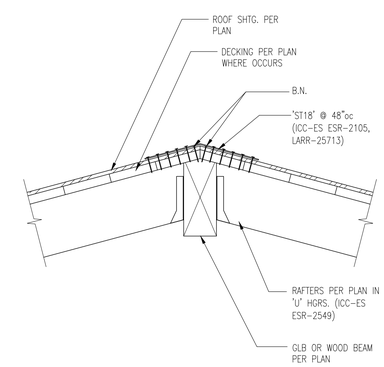

RIDGE SECTION

SCALE: 1"=1'-0" | 2

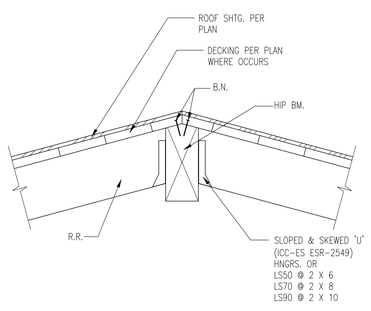

HIP BM. SECTION

SCALE: 1"=1'-0" | 12

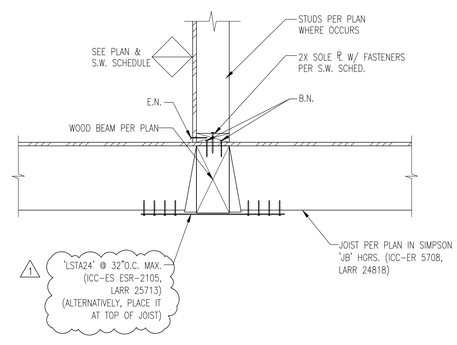

SECTION @ BM.

SCALE: 1"=1'-0" | 9

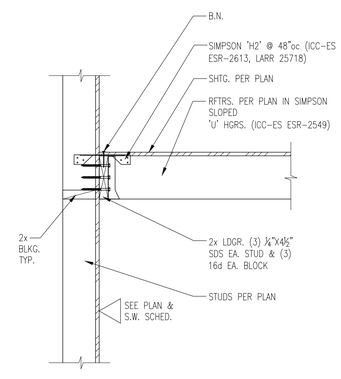

SECTION AT LOW ROOF

SCALE: 1"=1'-0" | 6

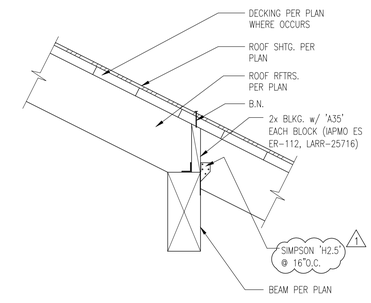

EAVE SECTION

SCALE: 1"=1'-0" | 3

REVISIONS		
NO.	REVISION	DATE
1	PC CORRECTIONS	09/06/17

RGSE inc. Structural
2720 Cochran St. Suite 8B
Simi Valley, CA 93065
P : 805.522.3379
F : 805.378.7137
info@rgseinc.com
www.rgseinc.com

NEW CONSTRUCTION & RENOVATIONS
STONEBRIDGE COMMUNITY CHURCH
4832 COCHRAN STREET
SIMI VALLEY, CA. 93063

SHEET TITLE :
FRAMING DETAILS

JOB NO: 16307
DRAWN: raulg@rgseinc.com
ENGINEER: sokheanc@rgseinc.com
DATE: 02/14/17
STAMP: REGISTERED PROFESSIONAL ENGINEER RAMON G. GARCIA No. 4595 Exp. 6/30/2017 STRUCTURAL STATE OF CALIFORNIA
COPY ONLY

S3.0

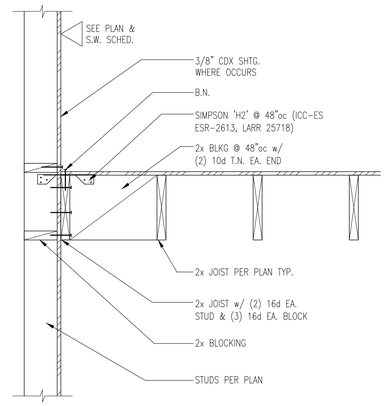

LOW ROOF SECTION SCALE: 1"=1'-0" 10

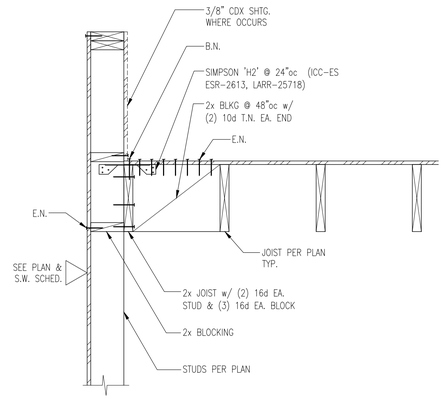

PARAPET SECTION SCALE: 1"=1'-0" 7

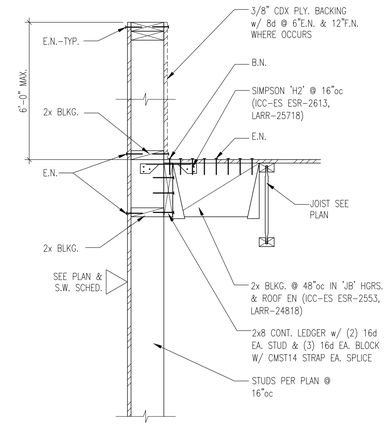

SECTION AT PARAPET SCALE: 1"=1'-0" 4

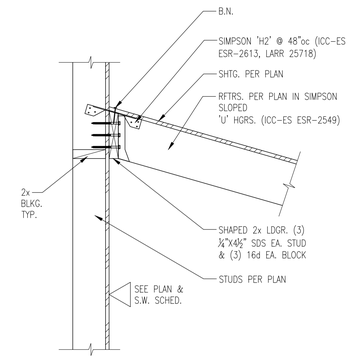

SECTION AT LOW ROOF SCALE: 1"=1'-0" 1

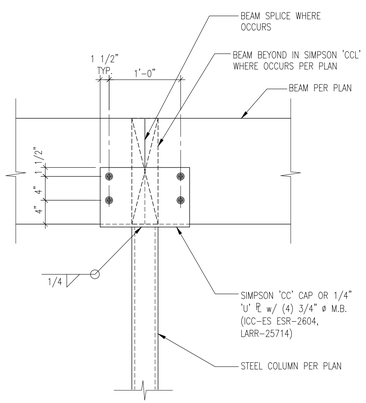

COLUMN AT BEAM SCALE: 1"=1'-0" 11

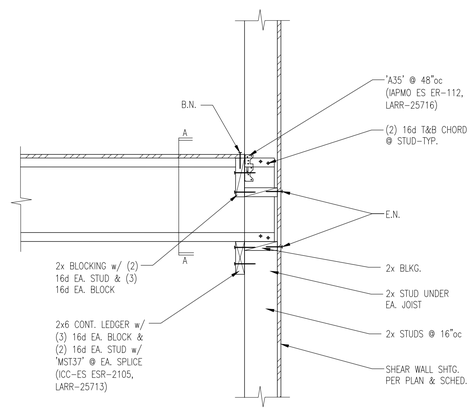

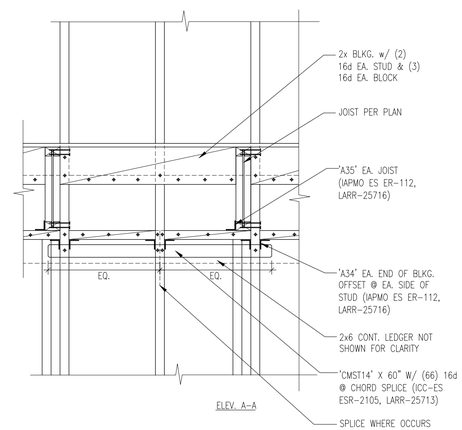

SECTION AT LEDGER SCALE: 1"=1'-0" 5

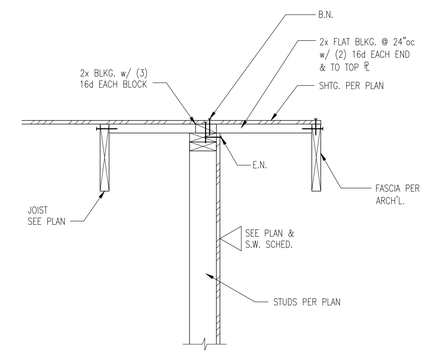

RAKE DETAIL SCALE: 1"=1'-0" 2

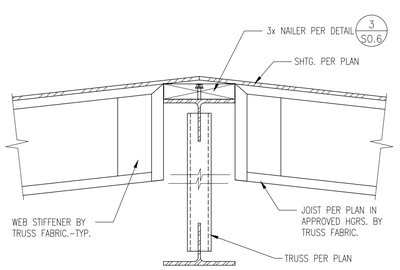

SECTION AT STEEL TRUSS SCALE: 1"=1'-0" 12

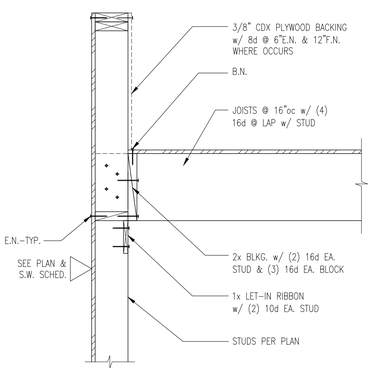

PARAPET SECTION SCALE: 1"=1'-0" 9

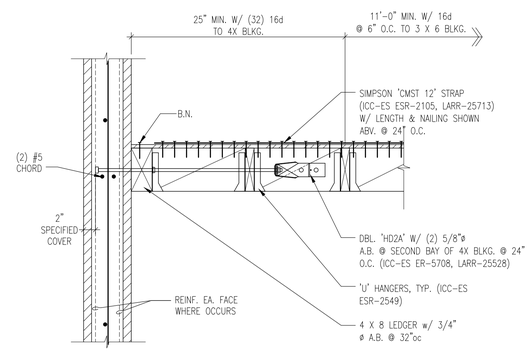

SECTION AT LEDGER SCALE: 1"=1'-0" 6

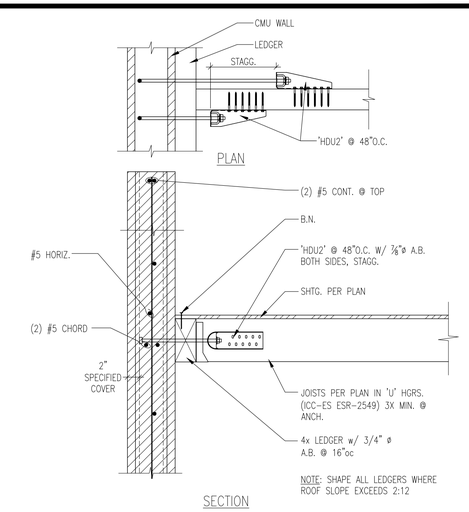

SECTION AT WALL SCALE: 1"=1'-0" 3

REVISIONS

NO.	REVISION	DATE
1	PC CORRECTIONS	09/06/17

RGSE inc. Structural
2720 Cochran St. Suite 8B
Simi Valley, CA 93065
P : 805.522.3379
F : 805.378.7137
info@rgseinc.com
www.rgseinc.com

NEW CONSTRUCTION & RENOVATIONS
STONEBRIDGE COMMUNITY CHURCH
4832 COCHRAN STREET
SIMI VALLEY, CA. 93063

SHEET TITLE :
FRAMING DETAILS

JOB NO: 16307
DRAWN: raulg@rgseinc.com
ENGINEER: sokheanc@rgseinc.com
DATE: 02/14/17
STAMP:

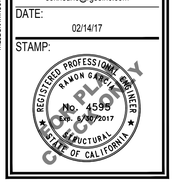

S3.1

WEB TUBE & WELD SCHEDULE			
MARK	MEMBER SIZE	't' (in.)	'L' (in.)
1	HSS 4X4X½	5/16	4
2	HSS 3X3X⅜	¼	4

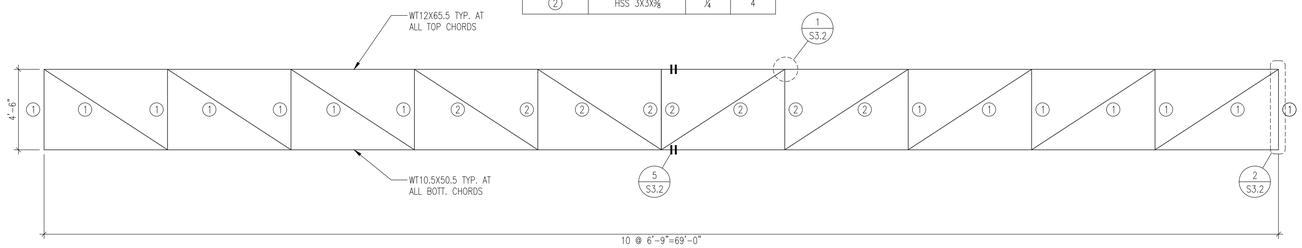

TRUSS ELEVATION

SCALE: 1/4"=1'-0" | 4

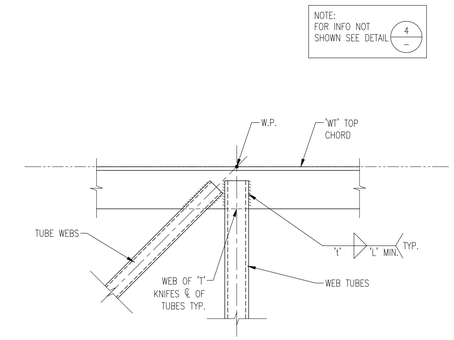

TRUSS DETAIL

SCALE: 1"=1'-0" | 1

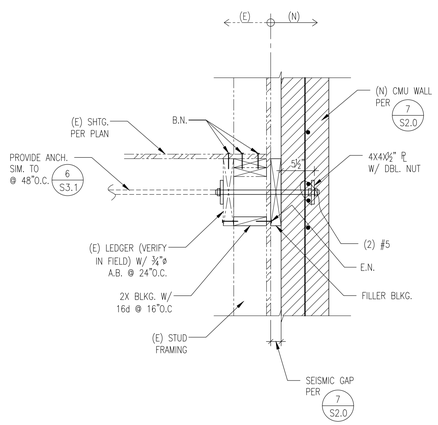

SECTION AT WALL

SCALE: 1"=1'-0" | 11

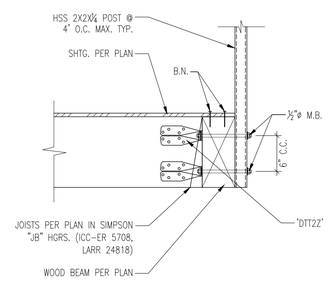

DECK GUIDE RAIL

SCALE: 1"=1'-0" | 8

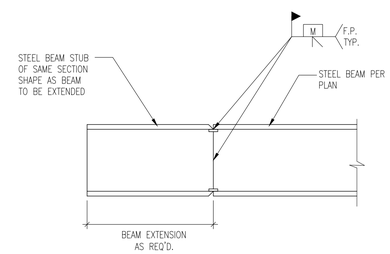

BM. TO BM. CONN.

SCALE: 1"=1'-0" | 5

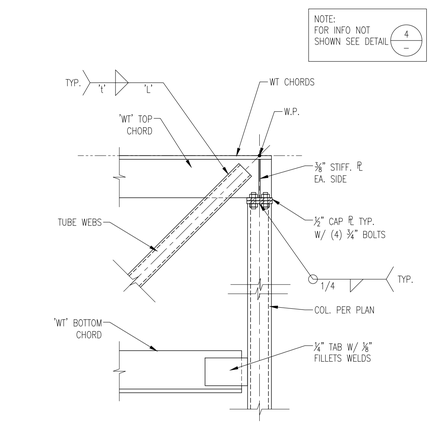

TRUSS DETAIL

SCALE: 1"=1'-0" | 2

SIMPLE BEAM CONNECTION SCHEDULE SHEAR PLATE CONNECTION			
MEMBER (DEPTH)	# OF BOLTS ⅞" ø A325N	CONN. ℙ 't'	WELD SIZE 'A'
< 8"	2	⅜"	¼"
8" – 10"	2	⅜"	¼"
12" – 14"	3	⅜"	¼"
15" – 16"	4	⅜"	¼"
18"	5	⅜"	¼"
20" – 21"	6	½"	¼"
24"	7	⅝"	5/16"
27"	8	⅝"	5/16"
30" – 33"	9	⅝"	5/16"
36"	10	⅝"	5/16"
40"	11 + 2	1"	5/16"

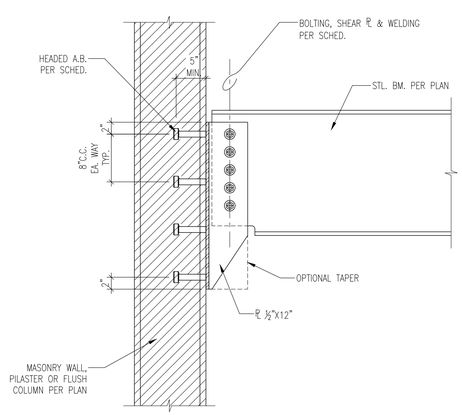

BEAM TO CMU A.B. SCHEDULE		
MARK	NO. OF 1" DIA. HEADED A.B.	ALLOW. LOAD
A	4	6k
B	6	10.5k
C	8	15.5k
D	12	21k
E	16	31k
F	20	38k

STL. BEAM TO CMU

SCALE: 1"=1'-0" | 9

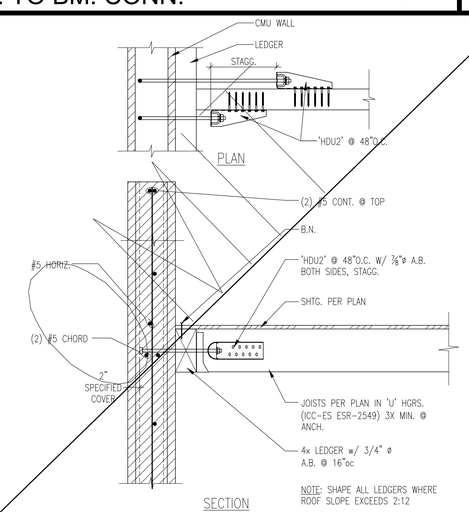

SECTION AT WALL

SCALE: 1"=1'-0" | 6

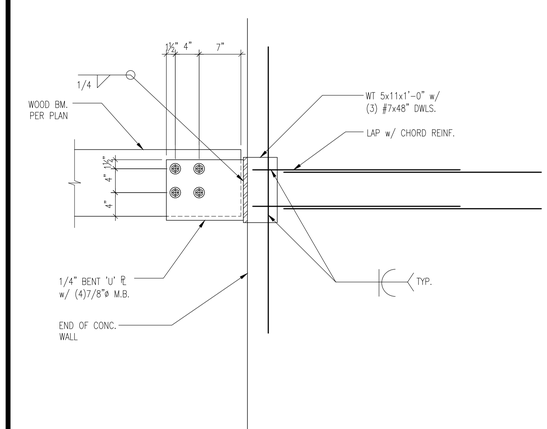

CONN. AT WALL

SCALE: 1"=1'-0" | 3

REVISIONS		
NO.	REVISION	DATE
1	PC CORRECTIONS	09/06/17

RGSE inc. Structural
2720 Cochran St. Suite 8B
Simi Valley, CA 93065
P : 805.522.3379
F : 805.378.7137
info@rgseinc.com
www.rgseinc.com

NEW CONSTRUCTION & RENOVATIONS
STONEBRIDGE COMMUNITY CHURCH
4832 COCHRAN STREET
SIMI VALLEY, CA. 93063

SHEET TITLE :
FRAMING DETAILS

JOB NO: 16307
DRAWN: raulg@rgseinc.com
ENGINEER: sokheanc@rgseinc.com
DATE: 02/14/17
STAMP: REGISTERED PROFESSIONAL ENGINEER RAMON GARCIA No. 4595 Exp. 6/30/2017 STRUCTURAL STATE OF CALIFORNIA
COPYRIGHT

S3.2

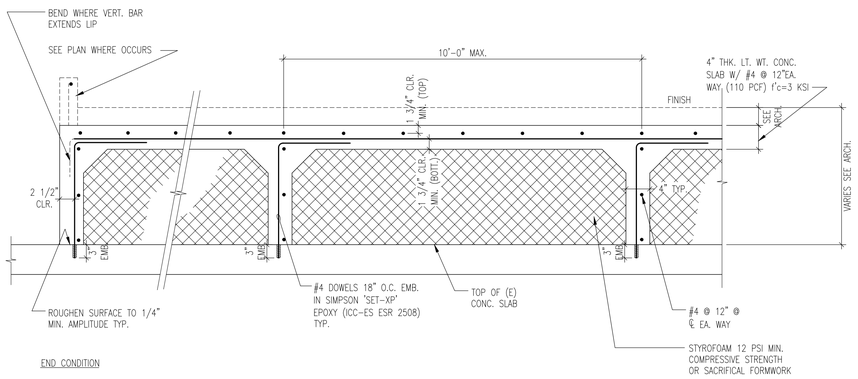

TYPICAL DOUBLE SLAB SECTION SCALE: 1"=1'-0" 7

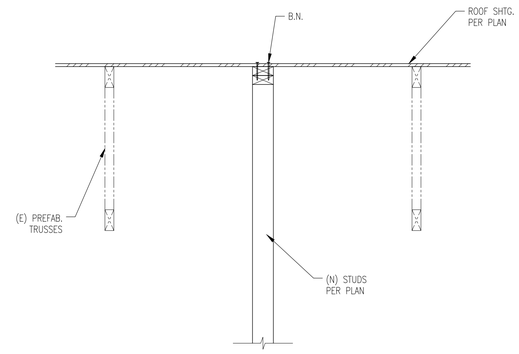

SECTION AT PARTITION WALL SCALE: 1"=1'-0" 4

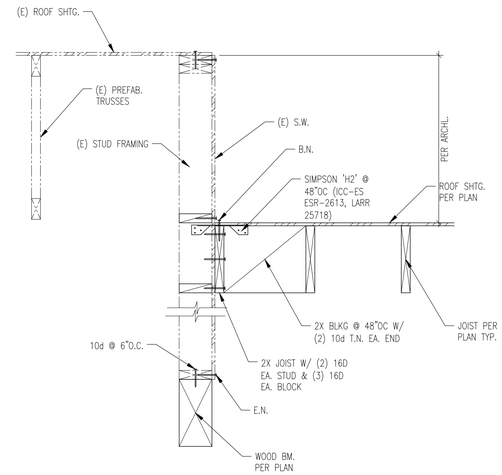

SECTION AT WALL SCALE: 1"=1'-0" 1

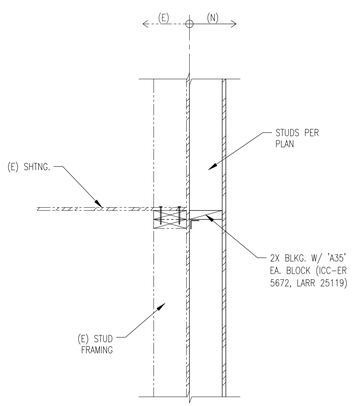

SECTION AT WALL SCALE: 1"=1'-0" 11

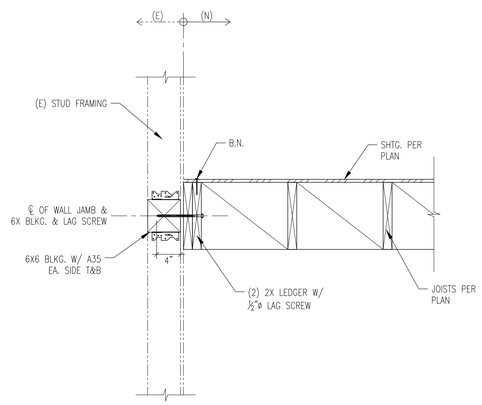

SECTION AT (E) WALL SCALE: 1"=1'-0" 8

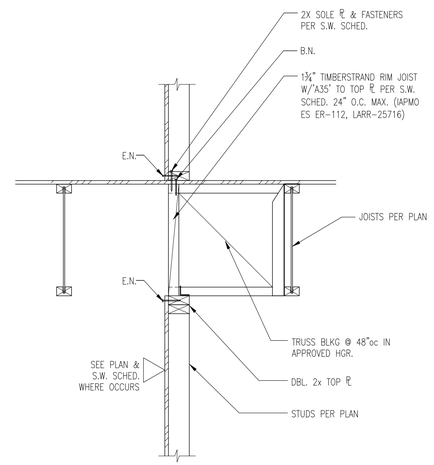

SECTION AT WALL SCALE: 1"=1'-0" 5

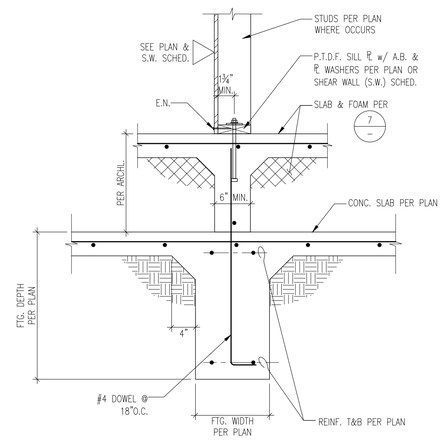

SECTION AT STAGE WALL SCALE: 1"=1'-0" 2

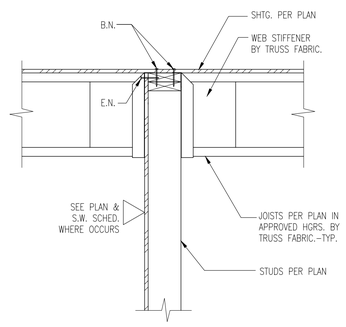

SECTION AT WALL SCALE: 1"=1'-0" 9

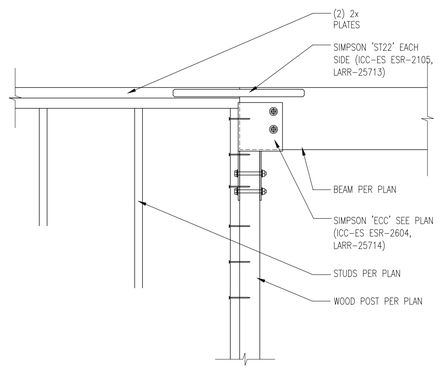

BEAM CONN. SCALE: 1"=1'-0" 6

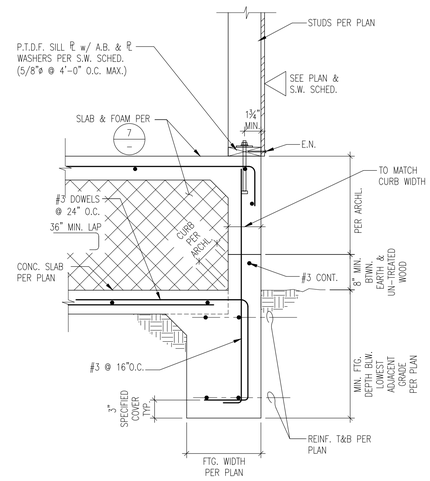

EXTERIOR FOOTING SECTION SCALE: 1"=1'-0" 3

- SCALE: 1"=1'-0" 12

REVISIONS

NO.	REVISION	DATE
1	PC CORRECTIONS	09/06/17

RGSE inc. Structural
2720 Cochran St. Suite 8B
Simi Valley, CA 93065
P : 805.522.3379
F : 805.378.7137
info@rgseinc.com
www.rgseinc.com

NEW CONSTRUCTION & RENOVATIONS
STONEBRIDGE COMMUNITY CHURCH
4832 COCHRAN STREET
SIMI VALLEY, CA. 93063

SHEET TITLE :
STRUCTURAL DETAILS

JOB NO: 16307
DRAWN: raulg@rgseinc.com
ENGINEER: sokheanc@rgseinc.com
DATE: 02/14/17
STAMP:

REGISTERED PROFESSIONAL ENGINEER RAMON G. GARCIA No. 4595 Exp. 6/30/2017 STRUCTURAL STATE OF CALIFORNIA
COPY ONLY

S3.3